No. PB-7P0A

TCM®

PARTS CATALOGUE

ELECTRIC FORKLIFT TRUCK

COUNTER BALANCED

FB10-8
FB15-8
FB18-8

TCM CORPORATION

ご使用のまえに

このパーツカタログは，TCM フォークリフト の構成部品を収録しています。

部品ご注文について

部品ご注文の際は，必ず車両の形式・仕様・製造番号（号車），部品番号および注文数を明示してください。車両の製造番号（号車）は車両銘板に表示しています。

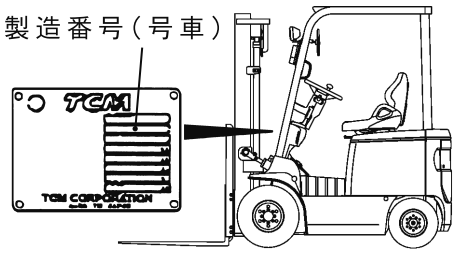

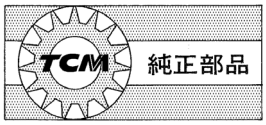

部品は，必ず「TCM純正部品」をご使用ください。
純正部品以外の部品をご使用になり，故障が発生した場合は保証できません。

ご使用について

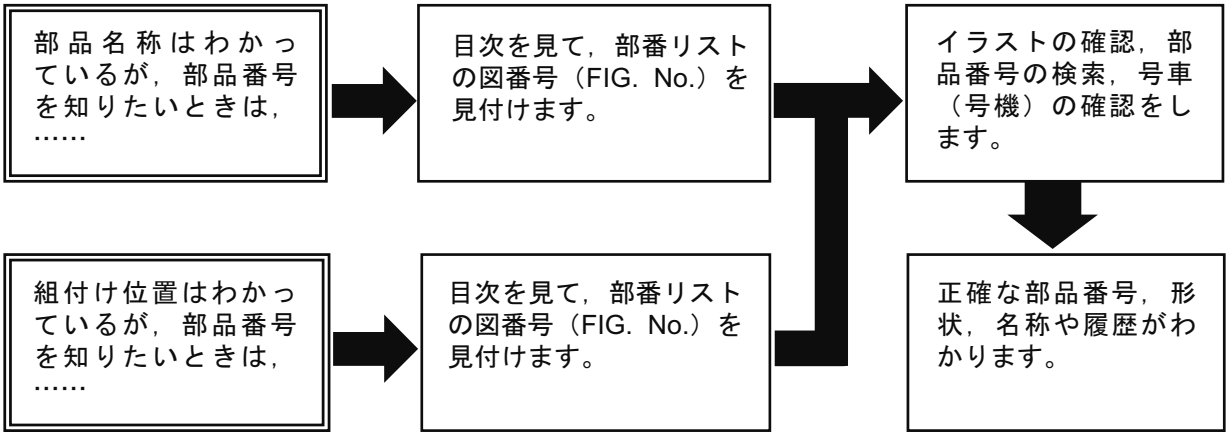

略語および記号

ＡＳＳＹ	組立品を示します。
ＲＨ	車両の前方向に向かって右側を示します。
ＬＨ	車両の前方向に向かって左側を示します。
ＡＲ	必要に応じた数を使用します。
＊	セットおよびキットの販売部品を示します。
Ｔ	厚みを示します。
＋	図示していません。
＃	単体販売しません。

部品は，品質向上のため予告なく変更することがありますので，あらかじめご了承ください。
詳細はTCM指定整備工場にご相談ください。

INTRODUCTION

This Parts Catalogue contains the component parts of the TCM FORKLIFT TRUCK.

How to order parts

When ordering, be sure to specify the model name, specification and serial number (machine number) of your machine, as well as the part number and desired quantity for each part. The machine serial number (machine number) is indicated on the machine name plate.

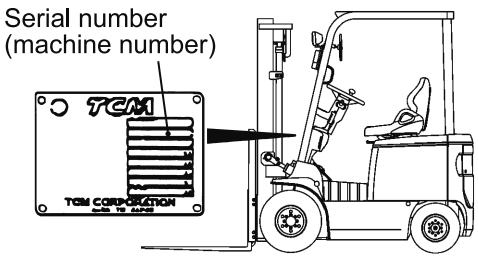

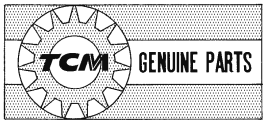

Always use "TCM's Genuine Parts". We cannot guarantee any loss or trouble attributable to other parts than ours.

How to use the Parts Catalogue

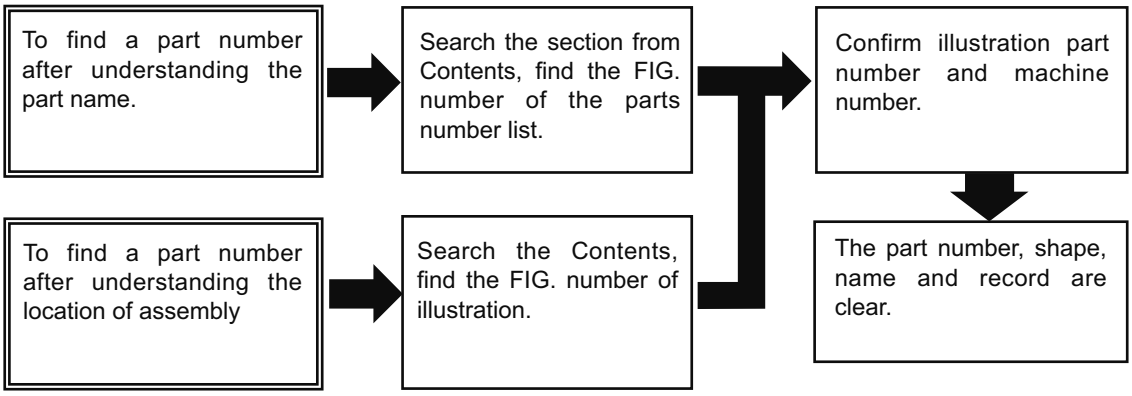

Abbreviations and symbols

ASSY	Assembled unit.
RH	Right-hand when viewed forward on the truck.
LH	Left-hand when viewed forward on the truck.
AR	Quantity required.
*	The marketable part set or kit.
T	Thickness.
+	Not illustrated.
#	Not sold separately.

Materials and specifications subject to change without notice.

CONTENTS　目次

A	FB10-8	B	FB15-8	C	FB18-8

CHASSIS　シャーシ (1/4)

SECTION　部門	A	B	C	FIG.No.
DRIVE MOTOR ﾄﾞﾗｲﾌﾞﾓｰﾀ	○	○	○	1
PUMP MOTOR ﾎﾟﾝﾌﾟﾓｰﾀ	○	○	○	2
WIRE HARNESS ﾜｲﾔﾊｰﾈｽ	○	○	○	3
HEAD LAMP & FRONT COMBINATION LAMP ﾍｯﾄﾞﾗﾝﾌﾟ & ﾌﾛﾝﾄｺﾝﾋﾞﾈｰｼｮﾝﾗﾝﾌﾟ	○	○	○	4
HEAD LAMP & FRONT COMBINATION LAMP [RRL] ﾍｯﾄﾞﾗﾝﾌﾟ & ﾌﾛﾝﾄｺﾝﾋﾞﾈｰｼｮﾝﾗﾝﾌﾟ	○	○		5
REAR COMBINATION LAMP ﾘﾔｰｺﾝﾋﾞﾈｰｼｮﾝﾗﾝﾌﾟ	○	○	○	6
REAR COMBINATION LAMP [RRL, RRL/(FC,CS35,FCS)] ﾘﾔｰｺﾝﾋﾞﾈｰｼｮﾝﾗﾝﾌﾟ	○	○		7
LICCENCE LAMP [RRL, LP] ﾗｲｾﾝｽﾗﾝﾌﾟ	○	○	○	8
BACK BUZZER ﾊﾞｯｸﾌﾞｻﾞｰ	○	○	○	9
BATTERY UNIT ﾊﾞｯﾃﾘﾕﾆｯﾄ	○	○	○	10
CONTROLLER ｺﾝﾄﾛｰﾗ	○	○	○	11
METER PANEL ﾒｰﾀﾊﾟﾈﾙ	○	○	○	12
ELECTRIC UNIT (SIDE) ｴﾚｸﾄﾘｯｸﾕﾆｯﾄ (ｻｲﾄﾞ)	○	○	○	13
ELECTRIC UNIT (FRONT) ｴﾚｸﾄﾘｯｸﾕﾆｯﾄ (ﾌﾛﾝﾄ)	○	○	○	14
TRANSFORMER ﾄﾗﾝｽﾌｫｰﾏ	○	○	○	15
CHARGER PANEL & RECTIFIER ﾁｬｰｼﾞｬﾊﾟﾈﾙ & ﾚｸﾃｨﾌｧｲｱ	○	○	○	16
CABLE ｹｰﾌﾞﾙ	○	○	○	17
BATTERY CASE [EXB,EXC,EXP,EXE,EXN,EXH] ﾊﾞｯﾃﾘｹｰｽ	○	○	○	18
COMBINATION SWITCH ｺﾝﾋﾞﾈｰｼｮﾝｽｲｯﾁ	○	○	○	19
DRIVE UNIT ﾄﾞﾗｲﾌﾞﾕﾆｯﾄ	○	○	○	20
DRIVE AXLE ﾄﾞﾗｲﾌﾞｱｸｽﾙ	○	○	○	21
WHEEL BRAKE ﾎｲｰﾙﾌﾞﾚｰｷ	○	○	○	22

CONTENTS　目次

A	FB10-8	B	FB15-8	C	FB18-8

CHASSIS　シャーシ (2/4)

SECTION　部門	A	B	C	FIG.No.
STEERING WHEEL UNIT ｽﾃｱﾘﾝｸﾞ ﾎｲｰﾙﾕﾆｯﾄ	○	○	○	23
STEERING WHEEL (INNER PARTS) ｽﾃｱﾘﾝｸﾞ ﾎｲｰﾙ (ｲﾝﾅﾊﾟｰﾂ)	○	○	○	24
GEAR BOX ｷﾞﾔｰﾎﾞｯｸｽ	○	○	○	25
STEERING SHAFT COVER ｽﾃｱﾘﾝｸﾞ ｼｬﾌﾄｶﾊﾞｰ	○	○	○	26
DRAG LINK ﾄﾞﾗｯｸﾞ ﾘﾝｸ	○	○	○	27
STEERING AXLE ｽﾃｱﾘﾝｸﾞ ｱｸｽﾙ	○	○	○	28
AXLE SUPPORT ｱｸｽﾙｻﾎﾟｰﾄ	○	○	○	29
HUB NUT ﾊﾌﾞ ﾅｯﾄ	○	○	○	30
FRONT WHEEL ﾌﾛﾝﾄﾎｲｰﾙ	○	○	○	31
FRONT WHEEL [TJF] ﾌﾛﾝﾄﾎｲｰﾙ			○	32
FRONT WHEEL [TRF] ﾌﾛﾝﾄﾎｲｰﾙ	○	○		33
FRONT WHEEL (UNIQUE) [TUCF,TUSF,TUWF,TUGF] ﾌﾛﾝﾄﾎｲｰﾙ (ﾕﾆｰｸ)	○	○	○	34
FRONT DOUBLE WHEEL [TJW, TW] ﾌﾛﾝﾄﾀﾞﾌﾞﾙﾎｲｰﾙ	○	○	○	35
REAR WHEEL ﾘﾔｰﾎｲｰﾙ	○	○	○	36
REAR WHEEL (UNIQUE) [TUCR,TUSR,TUWR,TUGR] ﾘﾔｰﾎｲｰﾙ (ﾕﾆｰｸ)	○	○	○	37
FENDER [DD] ﾌｪﾝﾀﾞ	○	○	○	38
EPS ACTUATOR EPS ｱｸﾁｭｴｰﾀ	○	○	○	39
OVERHEAD GUARD ｵｰﾊﾞｰﾍｯﾄﾞｶﾞｰﾄﾞ	○	○	○	40
REAR PIPE ﾘﾔ - ﾊﾟｲﾌﾟ	○	○	○	41
LAMP BRACKET ﾗﾝﾌﾟﾌﾞﾗｹｯﾄ	○	○	○	42
LAMP BRACKET [RRL, HLG] ﾗﾝﾌﾟﾌﾞﾗｹｯﾄ	○	○	○	43
OVERHEAD GUARD PARTS ｵｰﾊﾞｰﾍｯﾄﾞｶﾞｰﾄﾞﾊﾟｰﾂ	○	○	○	44

CONTENTS　目次

A	FB10-8	B	FB15-8	C	FB18-8

CHASSIS　シャーシ (3/4)

SECTION　部門	A	B	C	FIG.No.
ACCEL PEDAL ｱｸｾﾙﾍﾟﾀﾞﾙ	○	○	○	45
BRAKE PEDAL ﾌﾞﾚｰｷﾍﾟﾀﾞﾙ	○	○	○	46
BRAKE MASTER CYLINDER ﾌﾞﾚｰｷﾏｽﾀｼﾘﾝﾀﾞ	○	○	○	47
BRAKE PIPE ﾌﾞﾚｰｷﾊﾟｲﾌﾟ	○	○	○	48
PARKING BRAKE LEVER ﾊﾟｰｷﾝｸﾞﾌﾞﾚｰｷﾚﾊﾞｰ	○	○	○	49
FRAME ﾌﾚｰﾑ	○	○	○	50
BALANCE WEIGHT ﾊﾞﾗﾝｽｳｪｲﾄ	○	○	○	51
FRONT GUARD ﾌﾛﾝﾄｶﾞｰﾄﾞ	○	○	○	52
BONNET ﾎﾞﾝﾈｯﾄ	○	○	○	53
BATTERY COVER ﾊﾞｯﾃﾘｶﾊﾞｰ	○	○	○	54
FLOOR BOARD ﾌﾛｱﾎﾞｰﾄﾞ	○	○	○	55
UNDER COVER ｱﾝﾀﾞｶﾊﾞｰ	○	○	○	56
FRONT GUARD BOOT [FC,CS35,FCS35,FCS45] ﾌﾛﾝﾄｶﾞｰﾄﾞﾌﾞｰﾂ	○	○	○	57
SEAT ｼｰﾄ	○	○	○	58
SEAT [EXB, EXP] ｼｰﾄ	○	○	○	59
SEAT [SETLL] ｼｰﾄ	○	○	○	60
PUMP UNIT ﾎﾟﾝﾌﾟﾕﾆｯﾄ	○	○	○	61
CONTROL VALVE ｺﾝﾄﾛｰﾙﾊﾞﾙﾌﾞ	○	○	○	62
CONTROL VALVE [3SV] ｺﾝﾄﾛｰﾙﾊﾞﾙﾌﾞ	○	○	○	63
CONTROL VALVE [4SV] ｺﾝﾄﾛｰﾙﾊﾞﾙﾌﾞ	○	○	○	64
CONTROL VALVE [5SV] ｺﾝﾄﾛｰﾙﾊﾞﾙﾌﾞ	○	○	○	65
FRONT COVER ﾌﾛﾝﾄｶﾊﾞｰ	○	○	○	66

CONTENTS　目次

A	FB10-8	B	FB15-8	C	FB18-8

CHASSIS　シャーシ (4/4)

SECTION　部門	A	B	C	FIG.No.
COMBINATION VALVE ｺﾝﾋﾞﾈｰｼｮﾝﾊﾞﾙﾌﾞ	○	○	○	67
VALVE - ATTACHMENT SECTION ﾊﾞﾙﾌﾞ - ｱﾀｯﾁﾒﾝﾄｾｸｼｮﾝ	○	○	○	68
CONTROL VALVE FITTING ｺﾝﾄﾛｰﾙﾊﾞﾙﾌﾞﾌｨｯﾃｨﾝｸﾞ	○	○	○	69
VALVE CONTROL ﾊﾞﾙﾌﾞｺﾝﾄﾛｰﾙ	○	○	○	70
VALVE CONTROL [3SV] ﾊﾞﾙﾌﾞｺﾝﾄﾛｰﾙ	○	○	○	71
VALVE CONTROL [4SV] ﾊﾞﾙﾌﾞｺﾝﾄﾛｰﾙ	○	○	○	72
VALVE CONTROL [5SV] ﾊﾞﾙﾌﾞｺﾝﾄﾛｰﾙ	○	○	○	73
VALVE CONTROL KNOB ﾊﾞﾙﾌﾞｺﾝﾄﾛｰﾙﾉﾌﾞ	○	○	○	74
OIL TANK ｵｲﾙﾀﾝｸ	○	○	○	75
HYDRAULIC LINE (1/2) ﾊｲﾄﾞﾛﾘｯｸﾗｲﾝ	○	○	○	76
HYDRAULIC LINE (2/2) ﾊｲﾄﾞﾛﾘｯｸﾗｲﾝ	○	○	○	77
TILT CYLINDER ﾃｨﾙﾄｼﾘﾝﾀﾞ	○	○	○	78
TILT CYLINDER [CS, FCS35, FCS45] ﾃｨﾙﾄｼﾘﾝﾀﾞ	○	○	○	79
TILT CYLINDER PIN ﾃｨﾙﾄｼﾘﾝﾀﾞﾋﾟﾝ	○	○	○	80
DECAL (1/2) ﾃﾞｶﾙ	○	○	○	81
DECAL (2/2) ﾃﾞｶﾙ	○	○	○	82

CONTENTS　目次

A	FB10-8	B	FB15-8	C	FB18-8

MAST　マスト (1/1)

SECTION　部門	A	B	C	FIG.No.
[VM7P1, VM7P2]				
FORK [VM7P1,VM7P2] ﾌｫｰｸ	○	○	○	83
LIFT BRACKET [VM7P1,VM7P2] ﾘﾌﾄﾌﾞﾗｹｯﾄ	○	○	○	84
BACKREST [VM7P1,VM7P2] ﾊﾞｯｸﾚｽﾄ	○	○	○	85
MAST [VM7P1,VM7P2] ﾏｽﾄ	○	○	○	86
TILT GAUGE [TG,PPC,PR,PRX] [VM7P1,VM7P2] ﾃｨﾙﾄｹﾞｰｼﾞ	○	○	○	87
LIFT CYLINDER [VM7P1,VM7P2] ﾘﾌﾄｼﾘﾝﾀﾞ	○	○	○	88
LIFT CYLINDER [FCS45,FC,FCS35,FCS55] [VM7P1,VM7P2] ﾘﾌﾄｼﾘﾝﾀﾞ	○	○	○	89
MAST PIPING [VM7P1,VM7P2] ﾏｽﾄﾊﾟｲﾋﾟﾝｸﾞ	○	○	○	90
MAST PIPING [FC,RTL,CSA,CS35,FCS35,FCS45,FCS55] [VM7P1,VM7P2] ﾏｽﾄﾊﾟｲﾋﾟﾝｸﾞ	○	○	○	91
[VFM81E]				
FORK [VFM81E] ﾌｫｰｸ	○	○	○	92
LIFT BRACKET [VFM81E] ﾘﾌﾄﾌﾞﾗｹｯﾄ	○	○	○	93
BACKREST [VFM81E] ﾊﾞｯｸﾚｽﾄ	○	○	○	94
MAST [VFM81E] ﾏｽﾄ	○	○	○	95
TILT GAUGE [TG,PPC,PR] [VFM81E] ﾃｨﾙﾄｹﾞｰｼﾞ	○	○	○	96
LIFT CYLINDER (FRONT) [VFM81E] ﾘﾌﾄｼﾘﾝﾀﾞ（ﾌﾛﾝﾄ）	○	○	○	97
LIFT CYLINDER (REAR) [VFM81E] ﾘﾌﾄｼﾘﾝﾀﾞ（ﾘﾔｰ）	○	○	○	98
MAST PIPING [VFM81E] ﾏｽﾄﾊﾟｲﾋﾟﾝｸﾞ	○	○	○	99

FIG. 1 DRIVE MOTOR
(BD011010) ﾄﾞﾗｲﾌﾞﾓｰﾀ

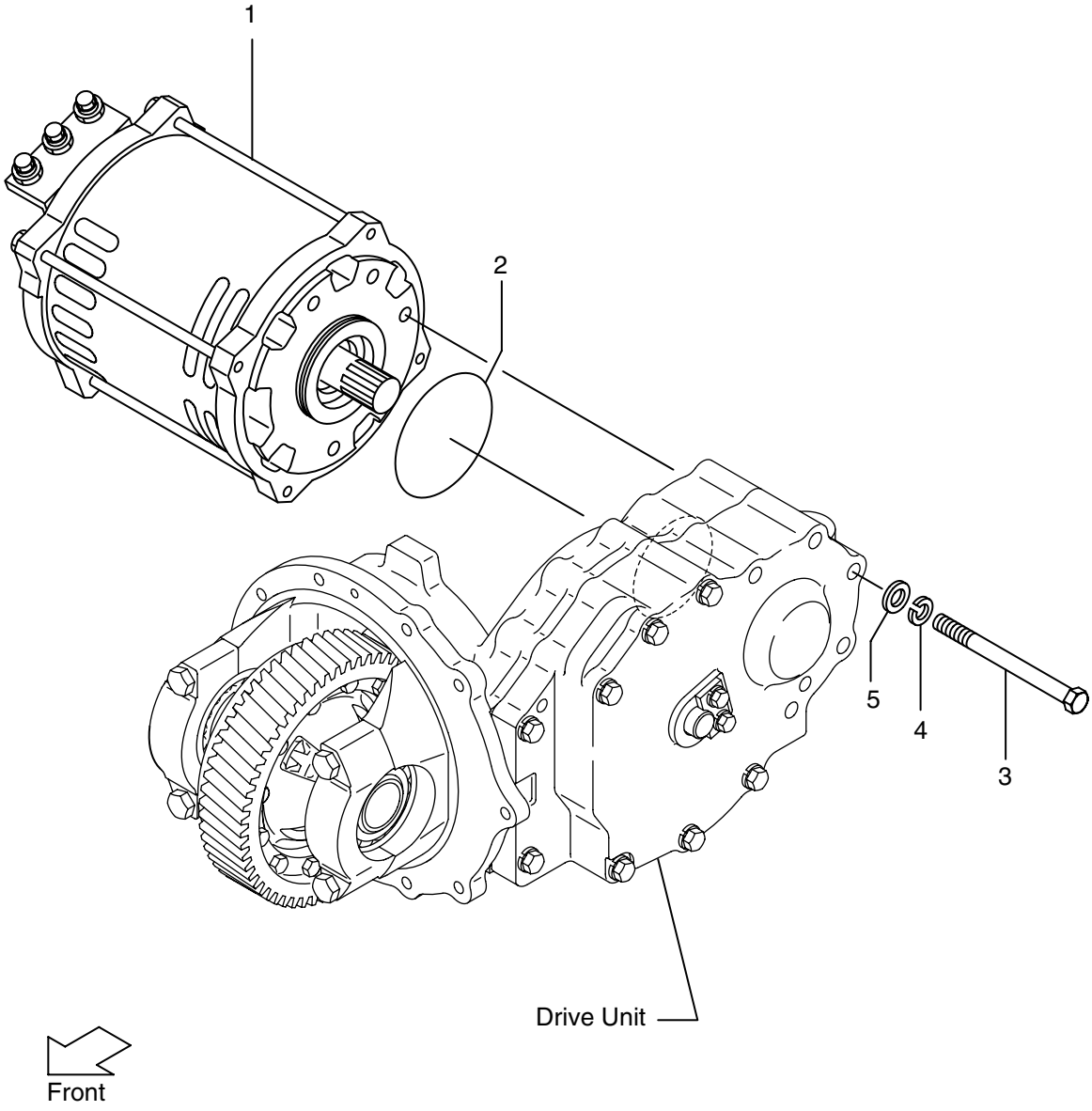

FIG. 1

(BD011010)

A: FB10-8 B: FB15-8 C: FB18-8

Item No.	Part No.	Mark	Description	Req'd	Remarks : serial No.
1	27P11-00201		MOTOR,DRIVE	1	
2	03310-00900		O RING	1	
3	281E1-02101		BOLT	5	
4	02000-00014		WASHER	5	
5	02011-00014		WASHER	5	

FIG. 2 PUMP MOTOR
(BD011020) ﾎﾟﾝﾌﾟﾓｰﾀ

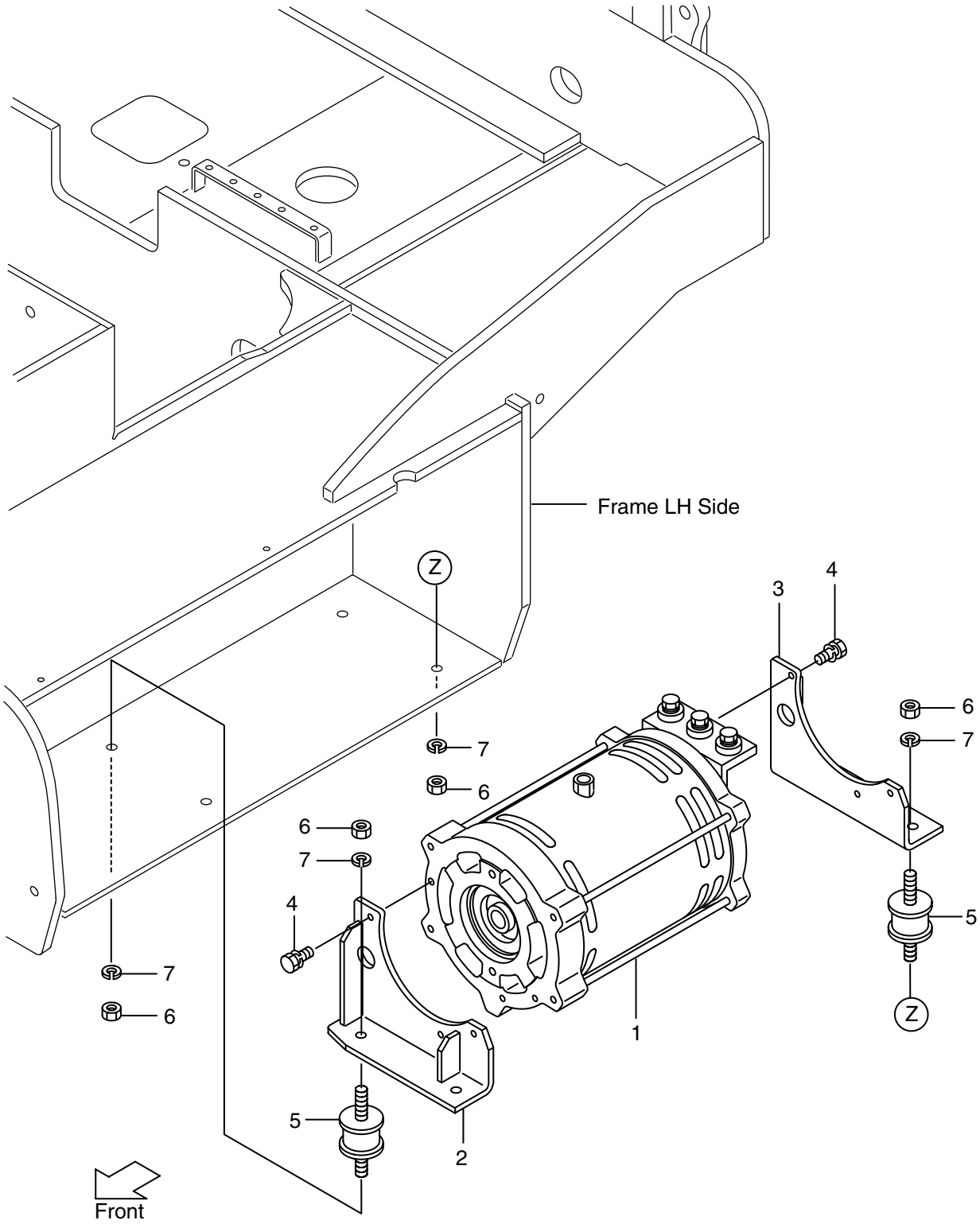

FIG. 2
(BD011020)

A: FB10-8 B: FB15-8 C: FB18-8

Item No.	Part No.	Mark	Description	Req'd	Remarks : serial No.
1	27P11-00301		MOTOR,PUMP	1	
2	27P11-00401		BRACKET,FRONT	1	
3	27P11-00411		BRACKET,REAR	1	
4	01185-08016		BOLT	6	
5	281E1-02001		MOUNT,EVER	4	
6	01400-00008		NUT	8	
7	02010-00008		WASHER	8	

FIG. 3 WIRE HARNESS
(BD012410) ﾜｲﾔﾊｰﾈｽ

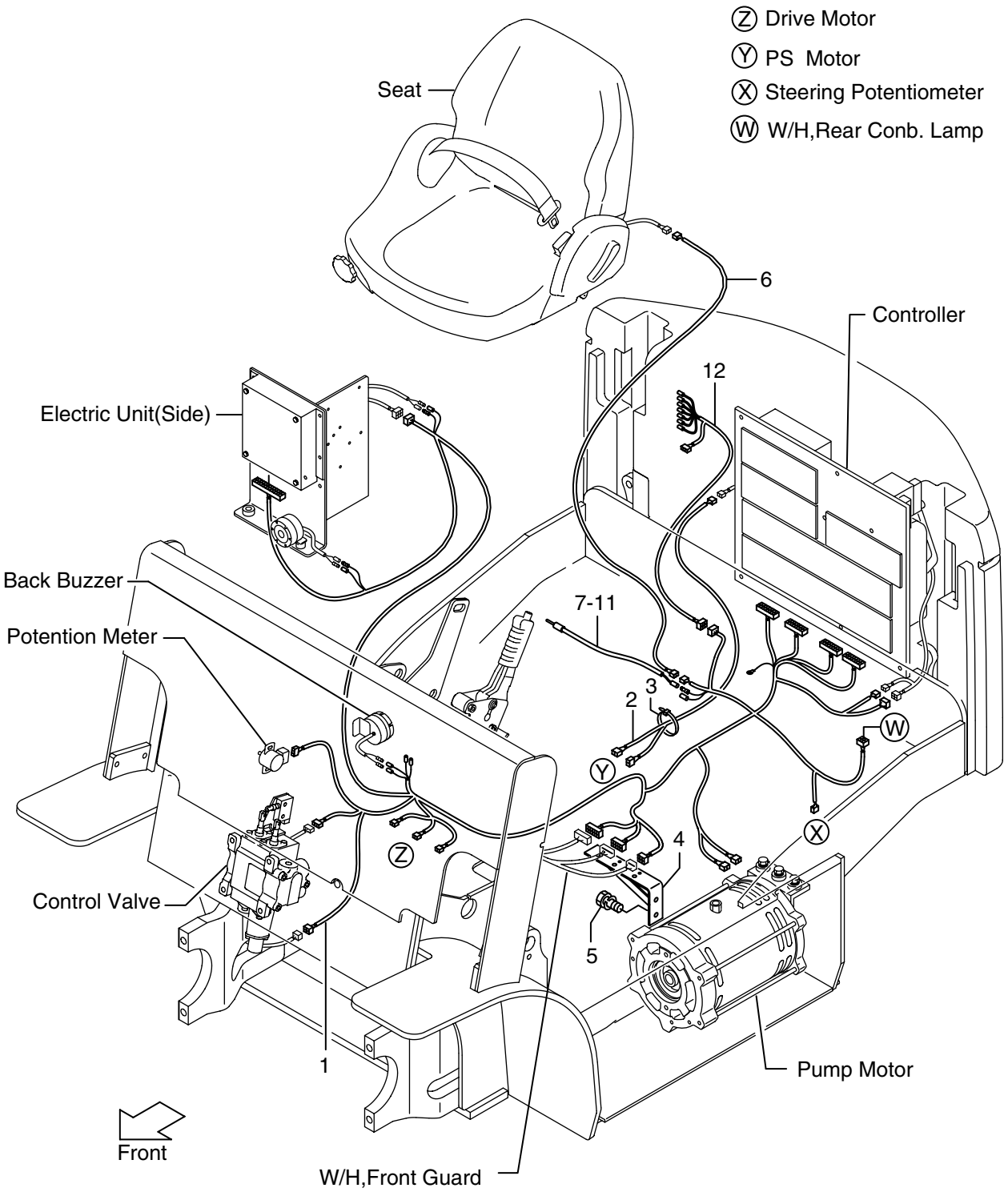

FIG. 3
(BD012410)

A: FB10-8 B: FB15-8 C: FB18-8

Item No.	Part No.	Mark	Description	Req'd	Remarks : serial No.
1	27P12-42001		WIRE HARNESS,FRAME	1	
2	27P12-42021		WIRE HARNESS,PS	1	
3	04913-11200		BAND	1	
4	27P12-62351		BRACKET	1	
5	01183-08012		BOLT	2	
6	27P12-42071		WIRE HARNESS, SEAT SWITCH	1	
7	281E2-42051		LEAD WIRE,BATTERY	1	
-	281E2-42051		LEAD WIRE,BATTERY	1	(EXB,EXP)/(BAW,BDH), EXE/(BAW,BDH)
-	NOT APPLICABLE		LEAD WIRE,BATTERY	999	EXB,EXC,EXE,EXH,EXN,EXP, BAZZZ
8	27042-63291		CLAMP	1	
-	27042-63291		CLAMP	1	(EXB,EXP)/(BAW,BDH), EXE/(BAW,BDH)
-	NOT APPLICABLE		CLAMP	999	EXB,EXC,EXE,EXH,EXN,EXP, BAZZZ
9	01100-04010		BOLT	1	
-	01100-04010		BOLT	1	(EXB,EXP)/(BAW,BDH), EXE/(BAW,BDH)
-	NOT APPLICABLE		BOLT	999	EXB,EXC,EXE,EXH,EXN,EXP, BAZZZ
10	02010-00004		WASHER	1	
-	02010-00004		WASHER	1	(EXB,EXP)/(BAW,BDH), EXE/(BAW,BDH)
-	NOT APPLICABLE		WASHER	999	EXB,EXC,EXE,EXH,EXN,EXP, BAZZZ
11	02000-00004		WASHER	1	
-	02000-00004		WASHER	1	(EXB,EXP)/(BAW,BDH), EXE/(BAW,BDH)
-	NOT APPLICABLE		WASHER	999	EXB,EXC,EXE,EXH,EXN,EXP, BAZZZ
12	281E2-42061		WIRE HARNESS,OPTION	1	A,B RRL
-	281E2-42061		WIRE HARNESS,OPTION	1	RWL,RLY,RLR,LP

FIG. 4 HEAD LAMP & FRONT COMBINATION LAMP

(BD012420) ﾍｯﾄﾞﾗﾝﾌﾟ & ﾌﾛﾝﾄｺﾝﾋﾞﾈｰｼｮﾝﾗﾝﾌﾟ

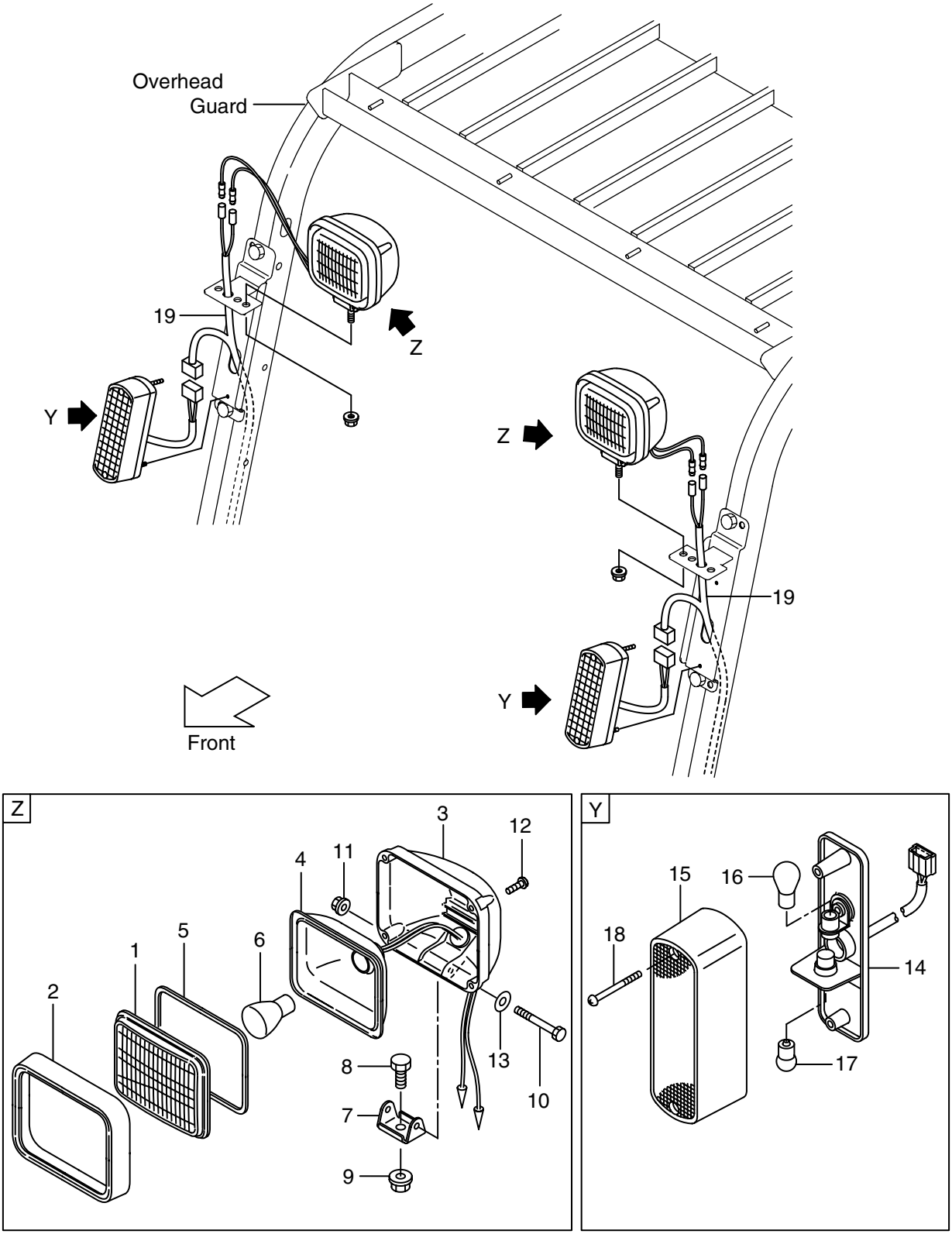

FIG. 4
(BD012420)

A: FB10-8 B: FB15-8 C: FB18-8

Item No.	Part No.	Mark	Description	Req'd	Remarks : serial No.
A1	277H2-42001		HEAD LAMP ASSY	2	INC.1-13
1	583A2-72401		LENS,GLASS	2	
2	583A2-72411		RIM	2	
3	NO PART NO.	#	HOUSING	2	
4	NO PART NO.	#	REFLECTOR	2	
5	583A2-72421		GASKET	2	
6	583A2-72431		BULB (36V/40W)	2	
7	NO PART NO.	#	BRACKET	2	
8	NO PART NO.	#	BOLT	2	
9	NO PART NO.	#	NUT	2	
10	NO PART NO.	#	BOLT	2	
11	NO PART NO.	#	NUT	2	
12	01030-04020		SCREW	8	
13	NO PART NO.	#	WASHER	2	
A2	277H2-42011		FRONT COMBINATION LAMP ASSY	2	INC.14-18
14	NO PART NO.	#	BODY	2	
15	216G2-40731		LENS	2	
16	277H2-42361		BULB (48V/25W)	2	
17	277H2-42371		BULB (48V/10W)	2	
18	NO PART NO.	#	SCREW	4	
19	277H2-42151		WIRE HARNESS,HEAD	2	

FIG. 5 HEAD LAMP & FRONT COMBINATION LAMP [RRL]

(BD012430) ﾍｯﾄﾞﾗﾝﾌﾟ & ﾌﾛﾝﾄｺﾝﾋﾞﾈｰｼｮﾝﾗﾝﾌﾟ

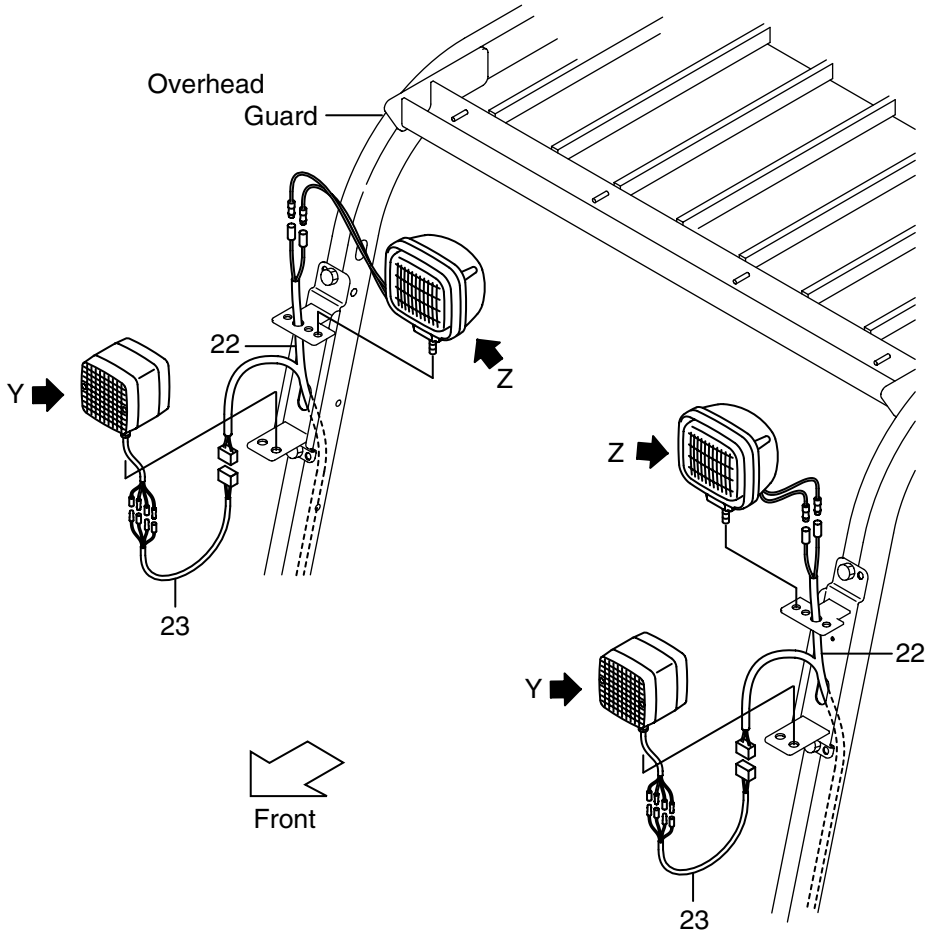

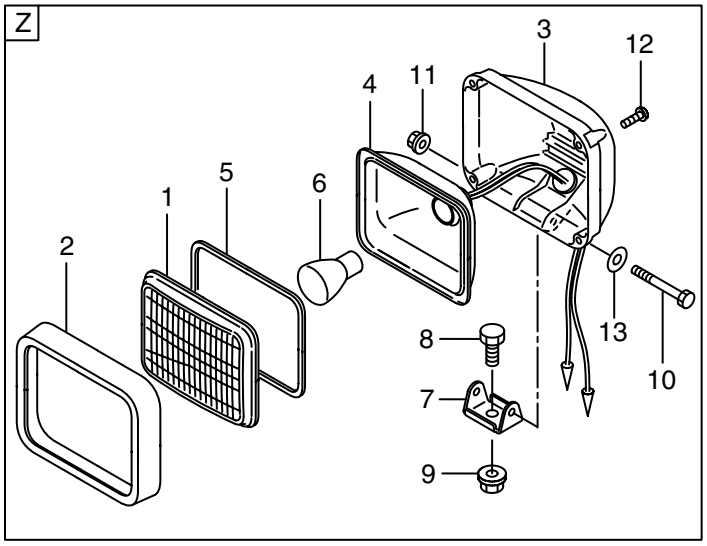

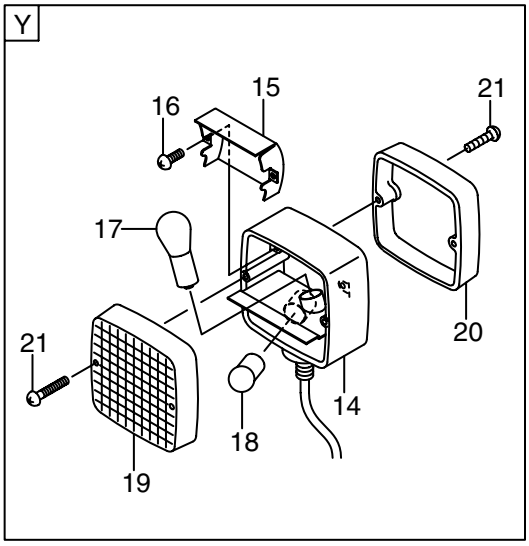

FIG. 5

(BD012430)

A: FB10-8 B: FB15-8 C: FB18-8

Item No.	Part No.	Mark	Description	Req'd	Remarks : serial No.
A1	277H2-42001		HEAD LAMP ASSY	2	A,B
					INC.1-13
1	583A2-72401		LENS,GLASS	2	A,B
2	583A2-72411		RIM	2	A,B
3	NO PART NO.	#	HOUSING	2	A,B
4	NO PART NO.	#	REFLECTOR	2	A,B
5	583A2-72421		GASKET	2	A,B
6	583A2-72431		BULB (36V/40W)	2	A,B
7	NO PART NO.	#	BRACKET	2	A,B
8	NO PART NO.	#	BOLT	2	A,B
9	NO PART NO.	#	NUT	2	A,B
10	NO PART NO.	#	BOLT	2	A,B
11	NO PART NO.	#	NUT	2	A,B
12	01030-04020		SCREW	8	A,B
13	NO PART NO.	#	WASHER	2	A,B
A2	581E9-90301		FRONT COMBINATION	2	A,B
			LAMP ASSY		INC.14-21
14	581E9-92601		BODY	2	A,B
15	52N59-92611		REFLECTOR	2	A,B
16	01043-04010		BOLT	4	A,B
17	581E9-92621		BULB (48V/25W)	2	A,B
18	581E9-92631		BULB (50V/8W)	2	A,B
19	52N59-92641		LENS,FRONT	2	A,B
20	52N59-92651		LENS,REAR	2	A,B
21	01043-04025		BOLT	8	A,B
22	277H2-42151		WIRE HARNESS,HEAD	2	A,B
23	581E9-92251		LEAD WIRE,	2	A,B
			FRONT COMBINATION		

FIG. 6 REAR COMBINATION LAMP

(BD012440) ﾘﾔｰｺﾝﾋﾞﾈｰｼｮﾝﾗﾝﾌﾟ

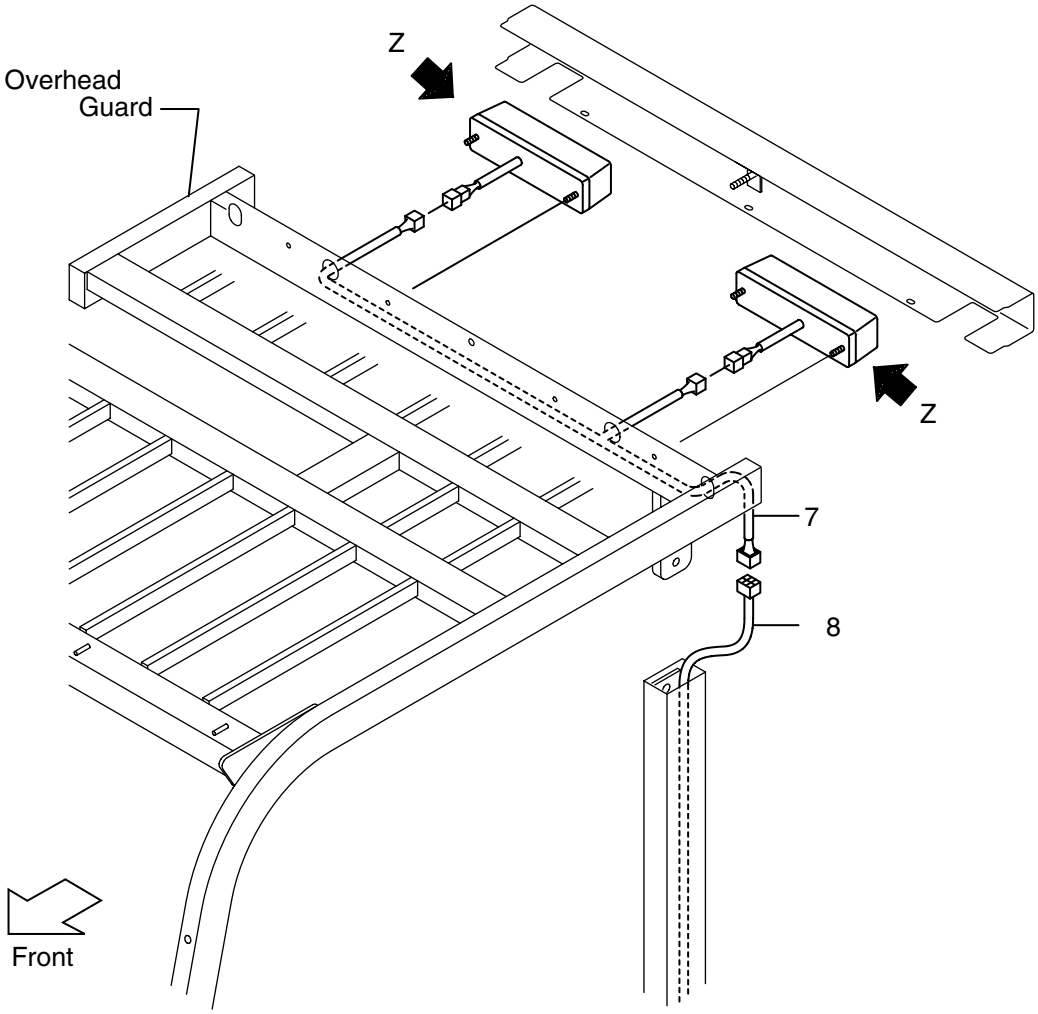

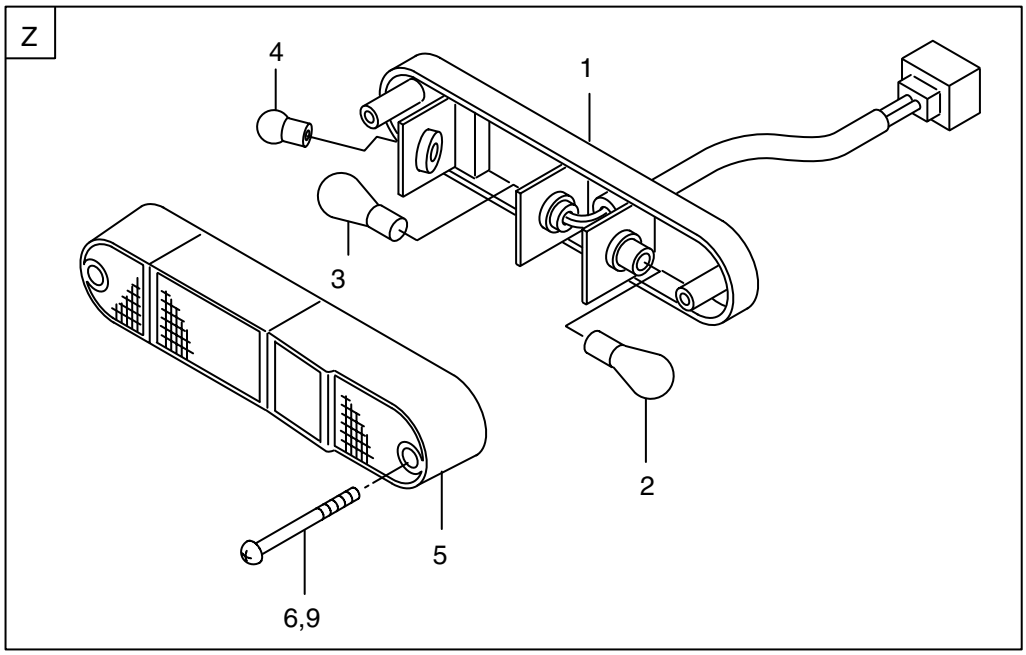

FIG. 6

(BD012440)

A: FB10-8 B: FB15-8 C: FB18-8

Item No.	Part No.	Mark	Description	Req'd	Remarks : serial No.
A	280C2-42001		REAR COMBINATION LAMP ASSY	2	INC.1-6
1	NO PART NO.	#	BODY	2	
2	271A2-42441		BULB (48V/25,10W)	2	
3	277H2-42361		BULB (48V/25W)	2	
4	277H2-42371		BULB (48V/10W)	2	
5	209K2-42021		LENS	2	
6	01030-05055		SCREW	4	
7	281E2-42071		WIRE HARNESS, REAR COMB LAMP	1	
8	281E2-42081		WIRE HARNESS, REAR COMB LAMP	1	
-	281E2-42091		WIRE HARNESS, REAR COMB LAMP(B)	1	HGH150
-	281E2-42091		WIRE HARNESS, REAR COMB LAMP(B)	1	HGH150/(FC,CS35,FCS35,FCS45)
9	514A3-72091		BOLT	4	FC,CS35,FCS
-	514A3-72091		BOLT	4	HGH150/(FC,CS35,FCS35,FCS45)

FIG. 7 REAR COMBINATION LAMP [RRL, RRL/(FC,CS35,FCS)]
(BD012450) ﾘﾔｰｺﾝﾋﾞﾈｰｼｮﾝﾗﾝﾌﾟ

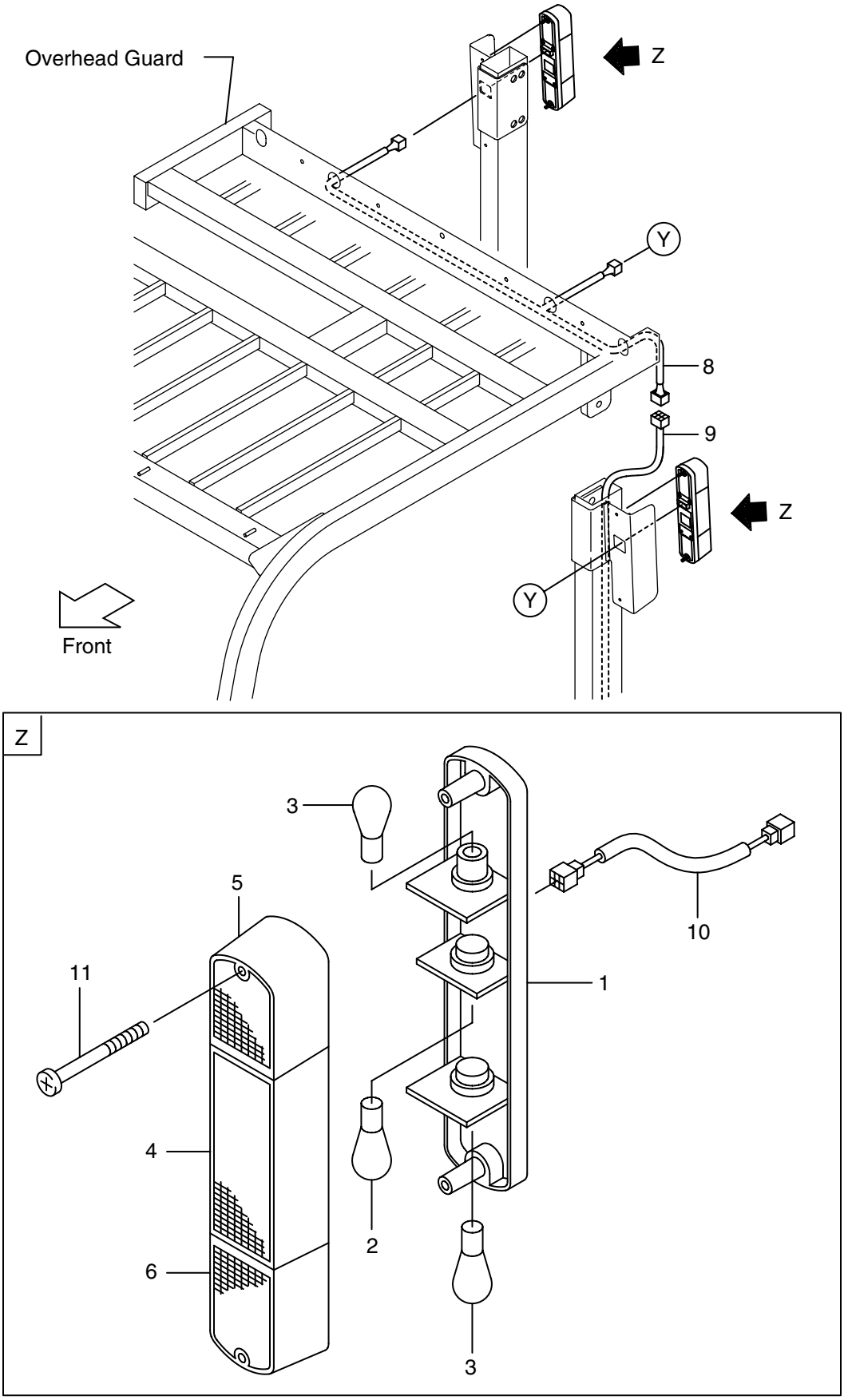

FIG. 7

(BD012450)

A: FB10-8 B: FB15-8 C: FB18-8

Item No.	Part No.	Mark	Description	Req'd	Remarks : serial No.
A1	581E9-90401		REAR COMBINATION LAMP ASSY	2	A,B INC.1-7
1	581E9-92301		BODY	2	A,B
2	581E9-92311		BULB (48V/25,10W)	2	A,B
3	581E9-92321		BULB (48V/25W)	4	A,B
4	52N59-92531		LENS	2	A,B
5	52N59-92541		LENS	2	A,B
6	52N59-92551		LENS	2	A,B
7	01030-05065	+	SCREW	4	A,B
8	281E2-42071		WIRE HARNESS, REAR COMB LAMP	1	A,B
9	281E2-42081		WIRE HARNESS, REAR COMB LAMP	1	A,B
10	52N59-92221		LEAD WIRE,REAR COMB.	2	A,B
11	509P3-72111		BOLT	4	A,B

FIG. 8 LICCENCE LAMP [RRL, LP]
(BD012460) ﾗｲｾﾝｽﾗﾝﾌﾟ

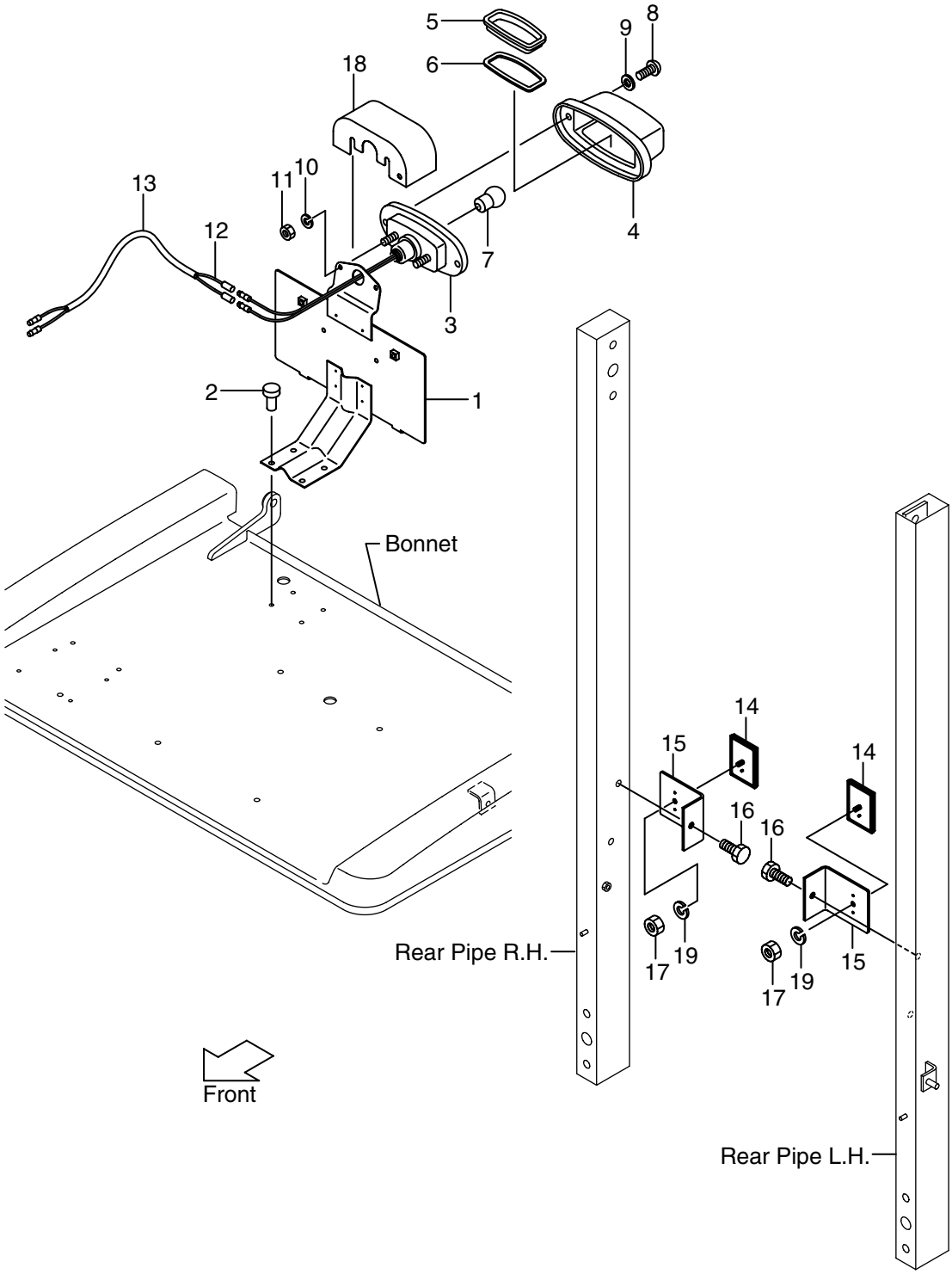

FIG. 8

(BD012460)

A: FB10-8 B: FB15-8 C: FB18-8

Item No.	Part No.	Mark	Description	Req'd	Remarks : serial No.
1	577B9-92001		BRACKET	1	A,B RRL
-	577B9-92001		BRACKET	1	LP
2	22256-42001		RIVET	4	A,B RRL
-	22256-42001		RIVET	4	LP
A1	27042-42351		LICENCE LAMP ASSY	1	A,B INC.3-11 RRL
-	27042-42351		LICENCE LAMP ASSY	1	INC.3-11 LP
3	27042-42421		BODY	1	A,B RRL
-	27042-42421		BODY	1	LP
4	NO PART NO.	#	COVER	1	A,B RRL
-	NO PART NO.	#	COVER	1	LP
5	22192-42411		LENS	1	A,B RRL
-	22192-42411		LENS	1	LP
6	27042-42451		GASKET	1	A,B RRL
-	27042-42451		GASKET	1	LP
7	27042-42461		BULB (48V/10W)	1	A,B RRL
-	27042-42461		BULB (48V/10W)	1	LP
8	NO PART NO.	#	SCREW	2	A,B RRL
-	NO PART NO.	#	SCREW	2	LP
9	NO PART NO.	#	WASHER	2	A,B RRL
-	NO PART NO.	#	WASHER	2	LP
10	NO PART NO.	#	WASHER	2	A,B RRL
-	NO PART NO.	#	WASHER	2	LP
11	NO PART NO.	#	NUT	2	A,B RRL
-	NO PART NO.	#	NUT	2	LP
12	271A2-42351		LEAD WIRE,LICENSE	1	A,B RRL
-	271A2-42351		LEAD WIRE,LICENSE	1	LP
13	04720-12020		TUBE,VINYL	1	A,B RRL
-	04720-12020		TUBE,VINYL	1	LP
14	52N59-92011		REFLECTOR	2	A,B RRL
15	581E9-92111		BRACKET	2	A,B RRL
16	01185-08020		BOLT	2	A,B RRL

FIG. 8
(BD012460)

A: FB10-8 B: FB15-8 C: FB18-8

Item No.	Part No.	Mark	Description	Req'd	Remarks : serial No.
17	01400-00006		NUT	2	A,B RRL
18	52N59-92401		COVER	1	A,B RRL
19	02010-00006		WASHER	2	A,B RRL

MEMO

FIG. 9 BACK BUZZER
(BD012470) ﾊﾞｯｸﾌﾞｻﾞｰ

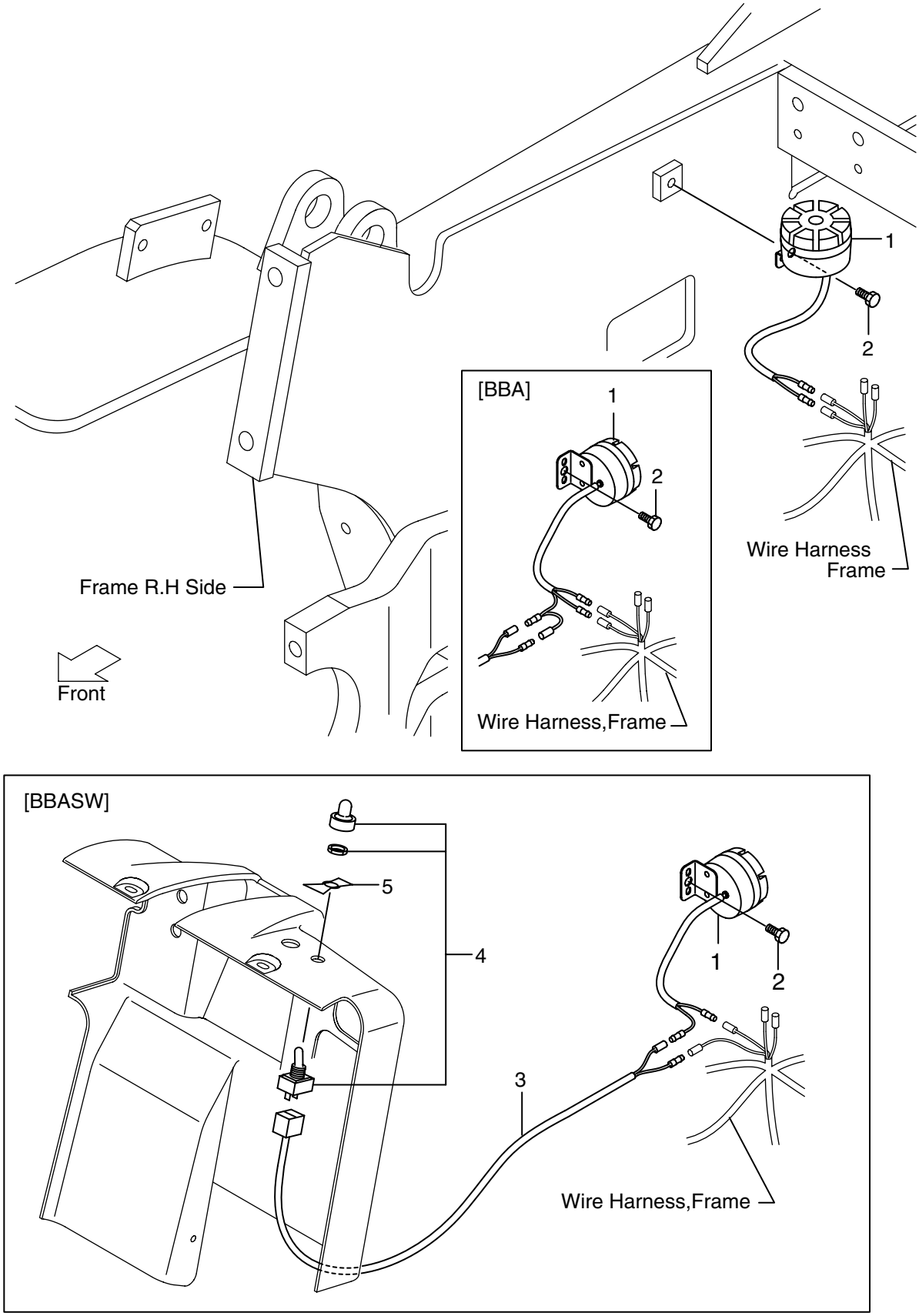

FIG. 9
(BD012470)

A: FB10-8 B: FB15-8 C: FB18-8

Item No.	Part No.	Mark	Description	Req'd	Remarks : serial No.
1	281E2-42201		BUZZER,BACK	1	
-	581E1-32101		BUZZER,BACK	1	BBA
2	01183-08012		BOLT	1	
3	581E1-32201		WIRE HARNESS, BACK BUZZER SW	1	BBASW
4	57042-72091		SWITCH	1	BBASW
5	27652-62211		PLATE,SWITCH	1	BBASW

FIG. 10 BATTERY UNIT

(BD012610) ﾊﾞｯﾃﾘﾕﾆｯﾄ

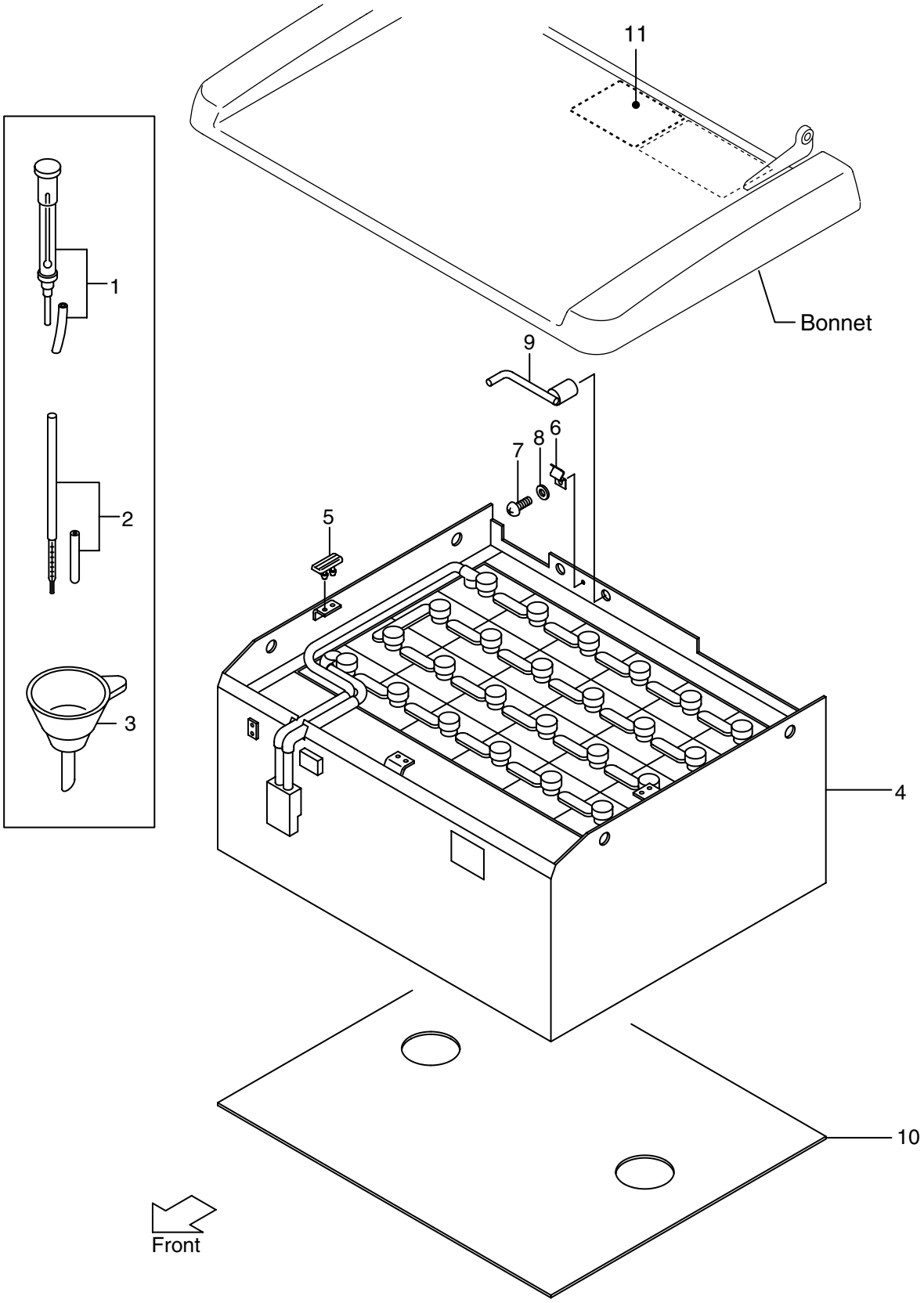

A: FB10-8 B: FB15-8 C: FB18-8

Item No.	Part No.	Mark	Description	Req'd	Remarks : serial No.
1	27319-10121		HYDROMETER	1	BAA/(BAHIT,BDH), EX1/(BAW/BAHIT,BDH)
-	27319-10121		HYDROMETER	1	BAA/BAGS,EX1/BAW/BAGS
2	27319-10131		THERMOMETER	1	BAA/(BAHIT,BDH), EX1/(BAW/BAHIT,BDH)
-	27319-10131		THERMOMETER	1	BAA/BAGS,EX1/BAW/BAGS
3	27919-12171		FUNNEL	1	BAA/(BAHIT,BDH), EX1/(BAW/BAHIT,BDH)
-	27919-12171		FUNNEL	1	BAA/BAGS,EX1/BAW/BAGS
4	281B2-60871		BATTERY	1	A
-	281B2-60871		BATTERY	1	A BAW330/BAHIT
-	281B2-60841		BATTERY	1	A BAW330/BAGS
-	281E2-60971		BATTERY	1	B
-	281E2-60971		BATTERY	1	A,B BAW400/BAHIT
-	281E2-60941		BATTERY	1	A,B BAW400/BAGS
-	27P22-60971		BATTERY	1	C
-	27P22-60971		BATTERY	1	C BAW400/BAHIT
-	27P22-60941		BATTERY	1	C BAW400/BAGS
-	281E2-61171		BATTERY	1	A,B BAW485/BAHIT
-	281E2-61141		BATTERY	1	A,B BAW485/BAGS
-	277H2-61271		BATTERY	1	B BAW545/BAHIT
-	277H2-61241		BATTERY	1	B BAW545/BAGS
-	581H2-81171		BATTERY	1	C BAW485/BAHIT
-	581H2-81101		BATTERY	1	C BAW485/BAGS
-	581H2-81371		BATTERY	1	C BAW545/BAHIT
-	581H2-81301		BATTERY	1	C BAW545/BAGS
-	581B3-80271		BATTERY	1	A EXE/BAW300/BAHIT
-	581E3-80271		BATTERY	1	A,B EXE/BAW400/BAHIT
-	581E3-80471		BATTERY	1	A,B EXE/BAW485/BAHIT
-	581E3-80671		BATTERY	1	B EXE/BAW545/BAHIT
-	581H3-80271		BATTERY	1	C EXE/BAW485/BAHIT

A: FB10-8 B: FB15-8 C: FB18-8

Item No.	Part No.	Mark	Description	Req'd	Remarks : serial No.
4	581H3-80471		BATTERY	1	C EXE/BAW545/BAHIT
-	281B2-60881		BATTERY	1	A BDF330
-	281E2-60981		BATTERY	1	A,B BDH400
-	27P22-60981		BATTERY	1	C BDH400
-	281E2-61181		BATTERY	1	A,B BDH485
-	277H2-61281		BATTERY	1	B BDH545
-	581H2-81181		BATTERY	1	C BDH485
-	581H2-81381		BATTERY	1	C BDH545
-	581B3-80281		BATTERY	1	A EXE/BDH330
-	581E3-80281		BATTERY	1	A,B EXE/BDH400
-	581E3-80481		BATTERY	1	A,B EXE/BDH485
-	581E3-80681		BATTERY	1	B EXE/BDH545
-	581H3-80281		BATTERY	1	C EXE/BDH485
-	581H3-80481		BATTERY	1	C EXE/BDH545
-	281B2-60971		BATTERY	1	A BAW330/BAHIT/BCW
-	281B2-60941		BATTERY	1	A BAW330/BAGS/BCW
-	281E2-61371		BATTERY	1	A BCW
-	281E2-61371		BATTERY	1	A,B BAW400/BAHIT/BCW
-	281E2-61341		BATTERY	1	A,B BAW400/BAGS/BCW
-	27P22-61371		BATTERY	1	C BCW
-	27P22-61371		BATTERY	1	C BAW400/BAHIT/BCW
-	27P22-61341		BATTERY	1	C BAW485/BAHIT/BCW
-	281E2-61471		BATTERY	1	A,B BAW485/BAHIT/BCW
-	281E2-61441		BATTERY	1	A,B BAW485/BAGS/BCW
-	277H2-61571		BATTERY	1	B BAW545/BAHIT/BCW

A: FB10-8 B: FB15-8 C: FB18-8

Item No.	Part No.	Mark	Description	Req'd	Remarks : serial No.
4	277H2-61541		BATTERY	1	B BAW545/BAGS/BCW
-	581H2-81271		BATTERY	1	C BAW485/BAHIT/BCW
-	581H2-81201		BATTERY	1	C BAW485/BAGS/BCW
-	581H2-81471		BATTERY	1	C BAW545/BAHIT/BCW
-	581H2-81401		BATTERY	1	C BAW545/BAGS/BCW
-	581B3-80371		BATTERY	1	A EXE/BAW330/BAHIT/BCW
-	581E3-80371		BATTERY	1	A,B EXE/BAW400/BAHIT/BCW
-	581E3-80571		BATTERY	1	A,B EXE/BAW485/BAHIT/BCW
-	581E3-80771		BATTERY	1	B EXE/BAW485/BAHIT/BCW
-	581H3-80571		BATTERY	1	C EXE/BAW545/BAHIT/BCW
5	271F2-63011		RUBBER	3	
6	277H2-62631		CLIP	1	
7	27042-44361		SCREW	1	
8	02000-00006		WASHER	1	
9	277H2-62601		ARM,LOCK	1	
10	281E2-63101		COVER,UNDER	1	A,B BUC,FC,CS35,FCS35,FCS45
-	281H2-63101		COVER,UNDER	1	C BUC,FC,CS35,FCS35,FCS45
-	277H2-63101		COVER,UNDER	1	A,B BAW545/(FC,CS35,FCS35, FCS45)
-	277H2-63101		COVER,UNDER	1	A,B BD545/(FC,CS35,FCS35,FCS45)
-	277H2-63101		COVER,UNDER	1	A,B BUC/(BAW545,BD545)
-	277H2-63101		COVER,UNDER	1	A,B BUC/LBC
-	277H2-63101		COVER,UNDER	1	A,B LBC/(FC,CS35,FCS35,FCS45)
11	581E3-82301		LABEL,CAUTION	1	EXE/LNP/(BAW,BDH)
-	581E3-82311		LABEL,CAUTION	1	EXE/BNP/(BAW,BDH)
-	581E3-82321		LABEL,CAUTION	1	EXE/BMNP/(BAW,BDH)

FIG. 11 CONTROLLER
(BD012630) コントローラ

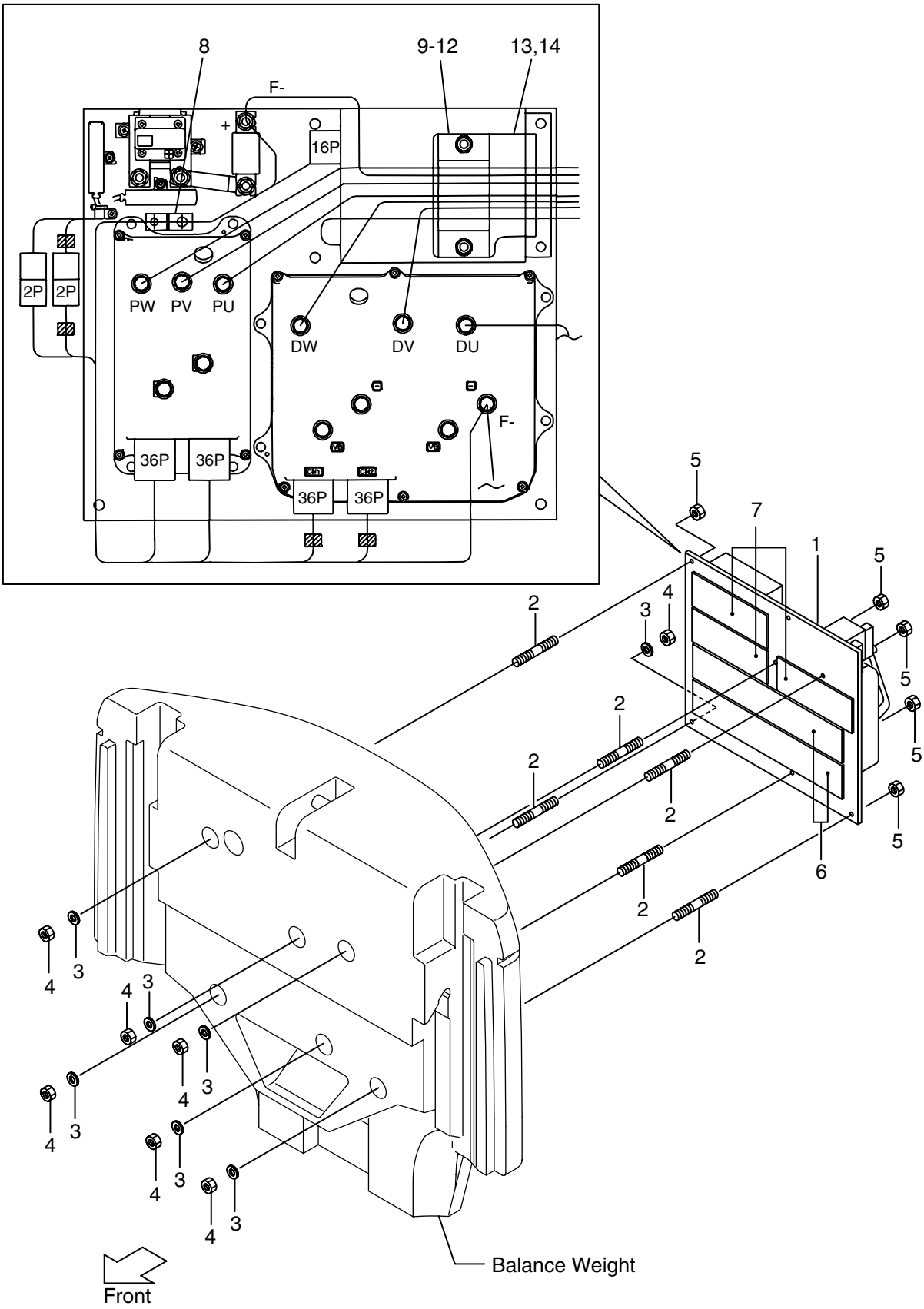

FIG. 11

(BD012630)

A: FB10-8 B: FB15-8 C: FB18-8

Item No.	Part No.	Mark	Description	Req'd	Remarks : serial No.
1	17P12-60201		CONTROLLER	1	
2	01200-08063		STUD	6	
3	256C5-62531		WASHER	6	
4	23652-12051		NUT	6	
5	01400-00008		NUT	6	
6	27P12-63001		SHEET,COOLING	2	
7	27P12-63011		SHEET,COOLING	3	
8	27P12-62501		CLIP	1	
9	282M7-62201		CLAMP	1	
10	01400-00008		NUT	2	
11	02000-00008		WASHER	2	
12	02010-00008		WASHER	2	
13	27P12-62401		BRACKET,CABLE	1	
14	01185-08012		BOLT&WASHER	1	

FIG. 12 METER PANEL
(BD012640) ﾒｰﾀﾊﾟﾈﾙ

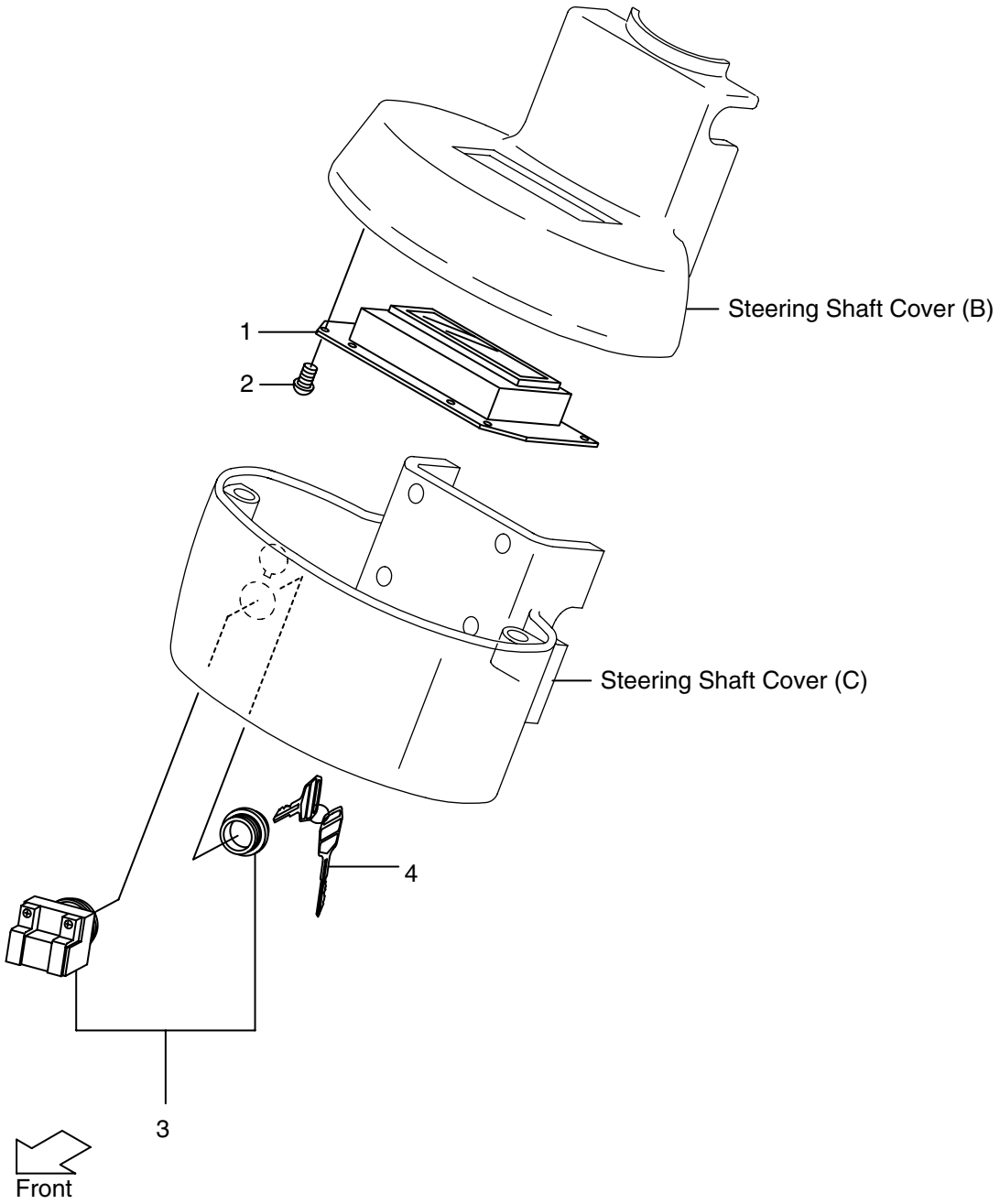

FIG. 12

(BD012640)

A: FB10-8 B: FB15-8 C: FB18-8

Item No.	Part No.	Mark	Description	Req'd	Remarks : serial No.
1	17P12-60601		PANEL,METER	1	
2	214A6-42781		SCREW	7	
3	281E2-62012		SWITCH,KEY	1	INC.4
4	281E2-62891		KEY,SPARE	1	1set=2pcs

FIG. 13 ELECTRIC UNIT (SIDE)

(BD012650) ｴﾚｸﾄﾘｯｸﾕﾆｯﾄ (ｻｲﾄﾞ)

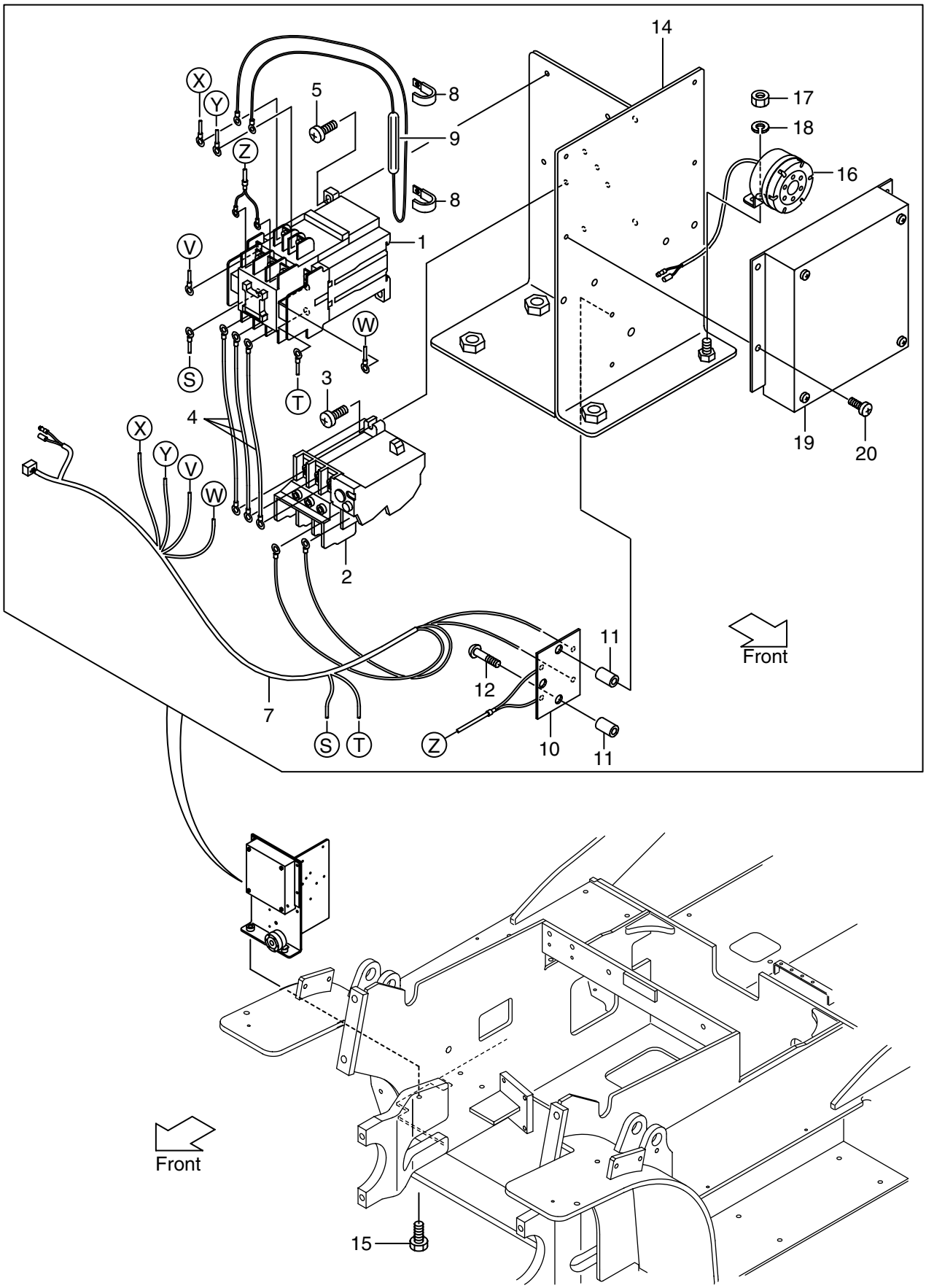

FIG. 13
(BD012650)

A: FB10-8 B: FB15-8 C: FB18-8

Item No.	Part No.	Mark	Description	Req'd	Remarks : serial No.
1	27912-62513		CONTACTOR,MAGNET S	1	
2	27042-63012		RELAY	1	
3	27042-63111		SCREW	2	
4	27412-62251		CABLE,(R.S.T)	3	
5	27042-63101		SCREW	2	
6	271A2-42501	+	TITE,TAP	1	
7	27P12-62581		WIRE HARNESS,CM	1	
8	271F2-62451		CLAMP	2	
9	27412-62161		KILLER,SURGE	1	
10	277H2-62961		RESISTOR	1	
11	271A2-42211		SPACER	2	
12	271A2-42591		SCREW	2	
13	27092-62281	+	SCREW	4	
14	27P12-62551		BRACKET	1	
15	01184-10020		BOLT	3	
16	281E2-42351		BUZZER	1	
17	01400-00008		NUT	1	
18	02010-00008		WASHER	1	
19	281E2-63251		RELAY UNIT	1	
-	581U9-92101		RELAY UNIT	1	A,B
					RRL
20	27092-62281		SCREW	4	

FIG. 14 ELECTRIC UNIT (FRONT)

(BD012660) エレクトリックユニット (フロント)

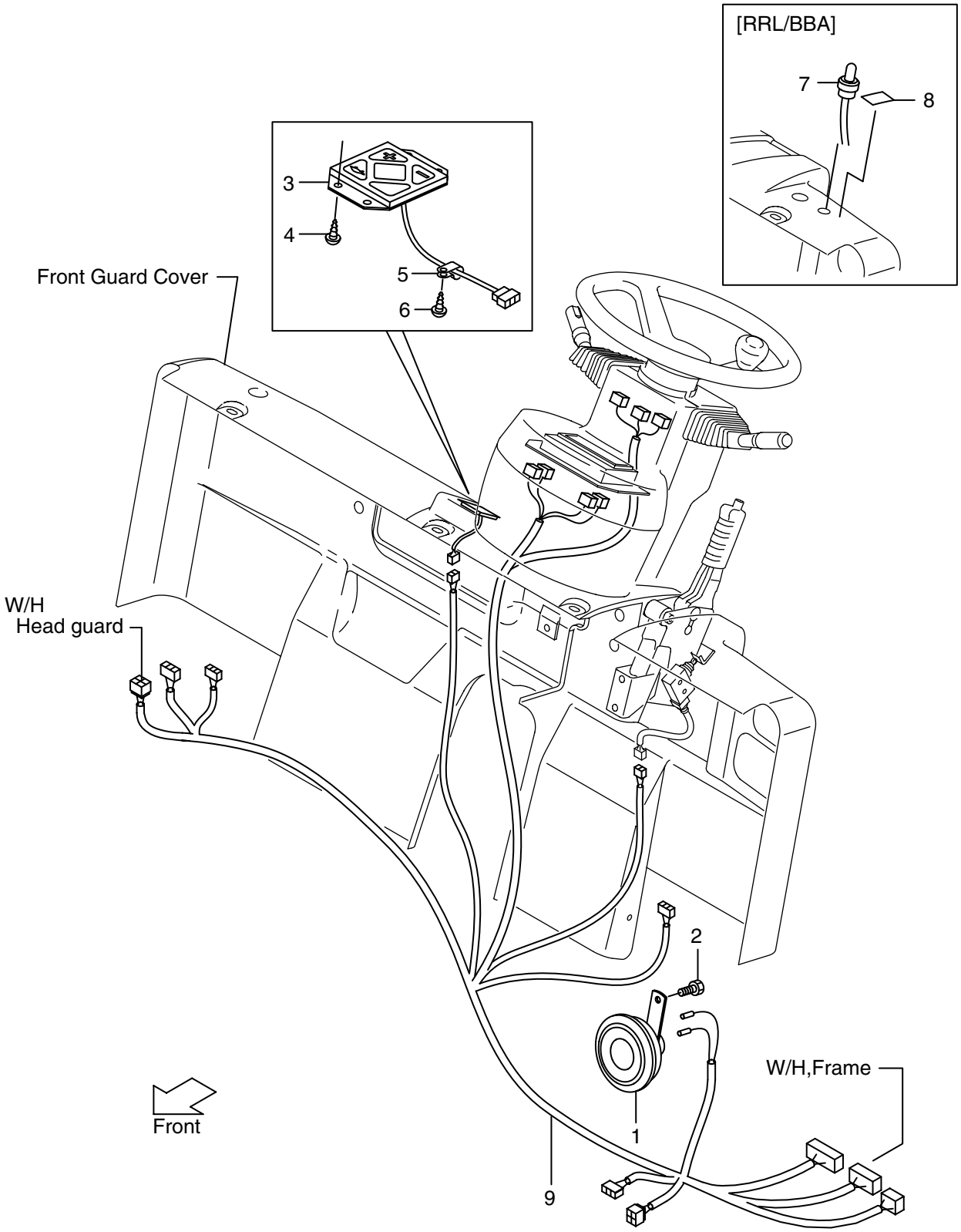

FIG. 14

(BD012660)

A: FB10-8 B: FB15-8 C: FB18-8

Item No.	Part No.	Mark	Description	Req'd	Remarks : serial No.
1	272A2-42001		HORN	1	
-	581E9-92101		HORN	1	A,B RRL,RRL/BBA
2	01185-08012		BOLT&WASHER	1	
3	27B02-61102		PANEL,SWITCH	1	
4	01032-04006		SCREW	4	
-	01044-04006		SCREW	4	A,B RRL,RRL/BBA
5	27B02-42601		BAND	1	
-	NOT APPLICABLE		BAND	999	A,B RRL,RRL/BBA
6	222A2-42031		SCREW	1	
-	NOT APPLICABLE		SCREW	999	A,B RRL,RRL/BBA
7	581E1-32001		SWITCH	1	A,B RRL/BBA
8	577H1-32021		DECAL	1	A,B RRL/BBA
9	27P12-42011		WIRE HARNESS, FRONT GUARD	1	

FIG. 15 TRANSFORMER
(BD012680) トランスフォーマ

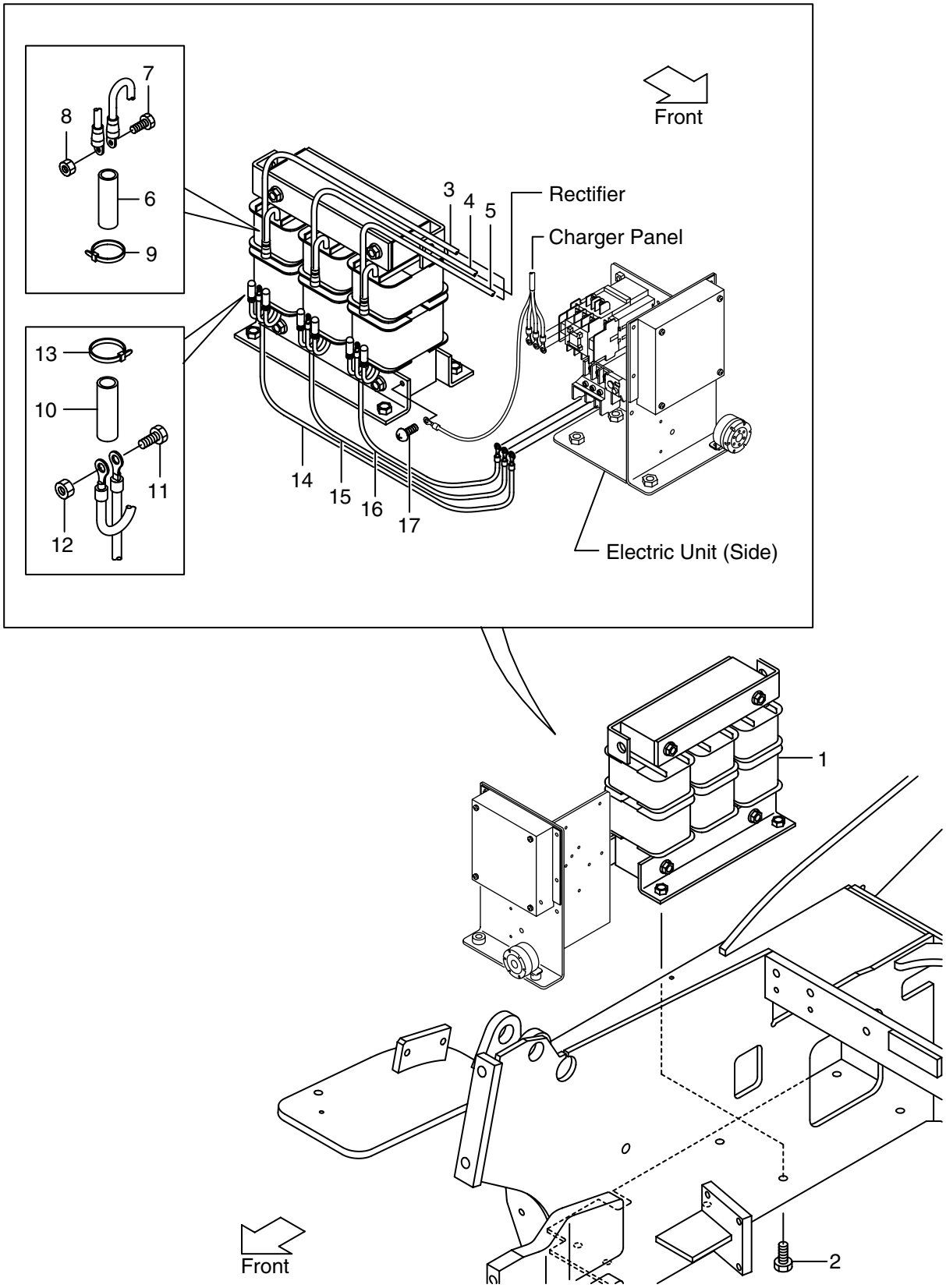

FIG. 15
(BD012680)

A: FB10-8 B: FB15-8 C: FB18-8

Item No.	Part No.	Mark	Description	Req'd	Remarks : serial No.
1	277H2-60603		TRANSFORMER	1	
2	01184-10020		BOLT	4	
3	27P12-62191		CABLE,U	1	
4	27P12-62201		CABLE,V	1	
5	27P12-62211		CABLE,W	1	
6	27042-63281		TUBE	3	
7	27062-62481		BOLT	3	
8	01400-00006		NUT	3	
9	04913-10200		BAND	3	
10	27042-63281		TUBE	3	
11	27062-62481		BOLT	3	
12	01400-00006		NUT	3	
13	04913-10200		BAND	3	
14	27P12-62601		CABLE,U	1	
15	27P12-62611		CABLE,V	1	
16	27P12-62621		CABLE,W	1	
17	27042-44351		SCREW	1	

FIG. 16 CHARGER PANEL & RECTIFIER
(BD012690) チャージャパネル & レクティファイア

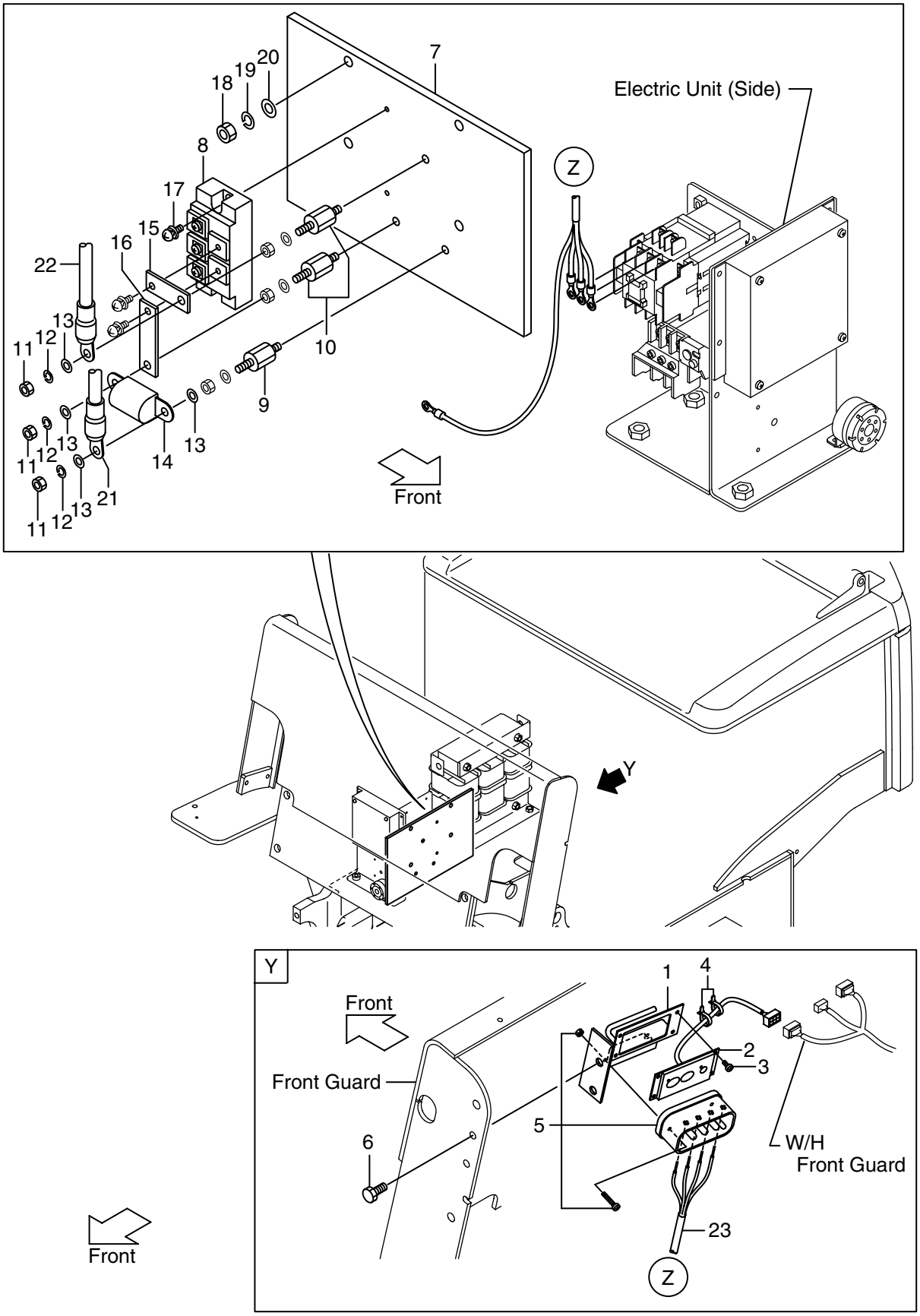

FIG. 16

(BD012690)

A: FB10-8 B: FB15-8 C: FB18-8

Item No.	Part No.	Mark	Description	Req'd	Remarks : serial No.
A1	281E2-60501		CHARGER PANEL ASSY	1	INC.1-5
1	281E2-62411		BRACKET	1	
2	281E2-62301		PANEL,SWITCH	1	
3	27092-62281		SCREW	4	
4	04913-10200		BAND	2	
5	281E2-62461		RECEPTACLE	1	
6	01183-08020		BOLT	2	
A2	27P12-60801		RECTIFIER ASSY	1	INC.7-17
7	27P12-63201		BASE	1	
8	177H2-62211		DIODE,MODULE	1	
9	171A2-62191		TERMINAL	1	
10	171A2-62271		TERMINAL	2	
11	01400-00008		NUT	3	
12	02010-00008		WASHER	3	
13	02000-00008		WASHER	4	
14	27292-62272		FUSE (96V 130A)	1	
15	280C2-62061		BUS BAR,S+	1	
16	280C2-62071		BUS BAR,S-	1	
17	01030-05014		SCREW	2	
18	01400-00008		NUT	4	
19	02010-00008		WASHER	4	
20	02000-00008		WASHER	4	
21	27P12-62231		CABLE,S+	1	
22	27P12-62241		CABLE,S-	1	
23	27P12-62221		CABLE	1	
24	01183-05012	+	BOLT	1	

FIG. 17 CABLE
(BD0126A0) ｹｰﾌﾞﾙ

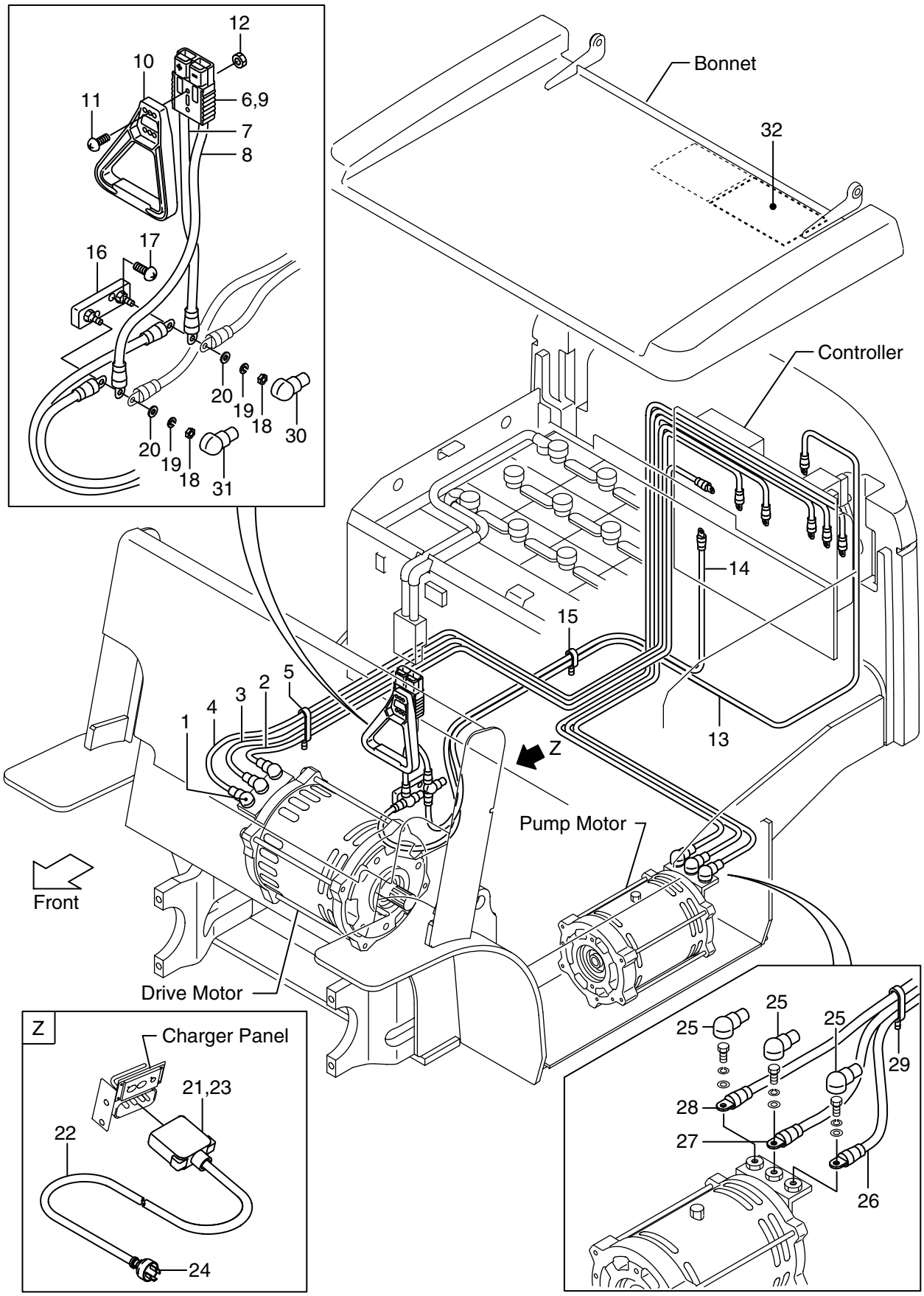

FIG. 17

(BD0126A0)

A: FB10-8 B: FB15-8 C: FB18-8

Item No.	Part No.	Mark	Description	Req'd	Remarks : serial No.
A1	27P12-60701		DRIVE CABLE ASSY	1	INC.1-5
1	27312-40751		CAP TERMINAL	3	
2	27P12-62131		CABLE,DU	1	
3	27P12-62141		CABLE,DV	1	
4	27P12-62151		CABLE,DW	1	
5	27B02-63001		BAND	1	
A2	27P22-62101		CONNECTOR & CABLE ASSY	1	INC.6-8
6	271A2-62561		CONNECTOR	1	
7	27P12-62111		CABLE,B+	1	
8	27P12-62121		CABLE,B-	1	
9	01030-06035		SCREW	2	
10	27042-62001		GRIP	1	
11	01030-06040		SCREW	2	
12	01400-00006		NUT	2	
A3	27P12-60601		POWER CABLE ASSY	1	INC.13-15
13	27P12-62251		CABLE,F+	1	
14	27P12-62261		CABLE,F-	1	
15	27B02-63001		BAND,CORD	1	
16	27P12-62091		TERMINAL	1	
17	173A2-65121		SCREW	2	
18	01400-00008		NUT	2	
19	02010-00008		WASHER	2	
20	02000-00008		WASHER	2	
A4	281E2-62251		INPUT CORD ASSY	1	INC.21-24
21	281E2-62471		RECEPTACLE	1	
22	0F05X-X0294		CABLE	1	
23	281E2-62291		WIRE,LEAD	1	
24	27322-62461		PLUG	1	
A5	27P12-60651		PUMP CABLE ASSY	1	INC.25-29
25	27312-40751		CAP	3	
26	27P12-62161		CABLE,PU	1	
27	27P12-62171		CABLE,PV	1	
28	27P12-62181		CABLE,PW	1	
29	27B02-63001		BAND	1	
30	27P12-62701		CAP	1	
31	27312-40751		CAP	1	
32	27B02-62901		DECAL	1	

FIG. 18 BATTERY CASE [EXB,EXC,EXP,EXE,EXN,EXH]
(BD012620) ﾊﾞｯﾃﾘｹｰｽ

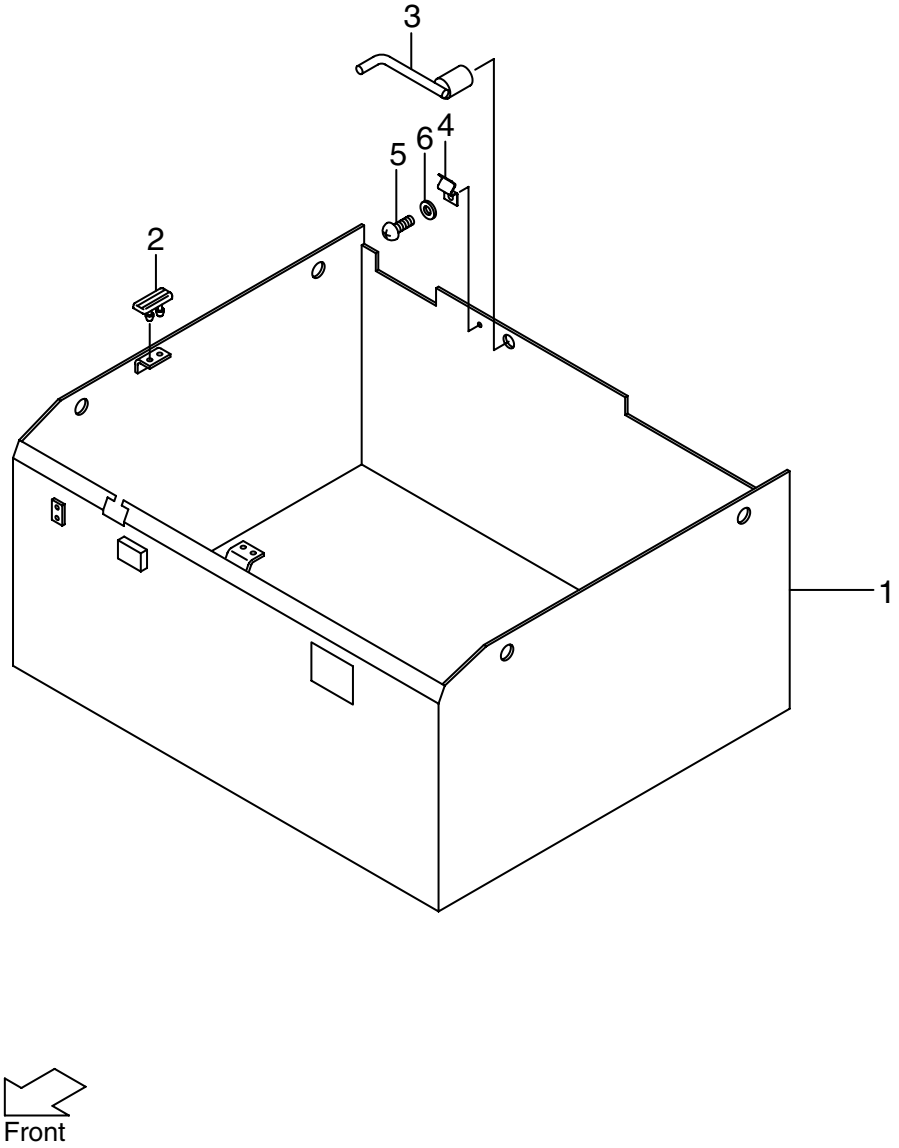

FIG. 18
(BD012620)

A: FB10-8 B: FB15-8 C: FB18-8

Item No.	Part No.	Mark	Description	Req'd	Remarks : serial No.
1	281E2-60711		CASE,BATTERY	1	A,B EXB,EXC,EXP
-	281H2-61001		CASE,BATTERY	1	C EXB,EXC,EXP
-	581E3-80401		CASE,BATTERY	1	A,B EXE,EXN,EXH
-	581H3-80401		CASE,BATTERY	1	C EXE,EXN,EXH
-	277H2-61001		CASE,BATTERY	1	A,B LBC/(EXB,EXC,EXP)
-	581E3-80501		CASE,BATTERY	1	A,B LBC/(EXE,EXN,EXH)
2	271F2-63011		RUBBER	3	
3	277H2-62601		ARM,LOCK	1	
4	277H2-62631		CLIP	1	
5	27042-44361		SCREW	1	
6	02000-00006		WASHER	1	

FIG. 19 COMBINATION SWITCH
(BD012670) ｺﾝﾋﾞﾈｰｼｮﾝｽｲｯﾁ

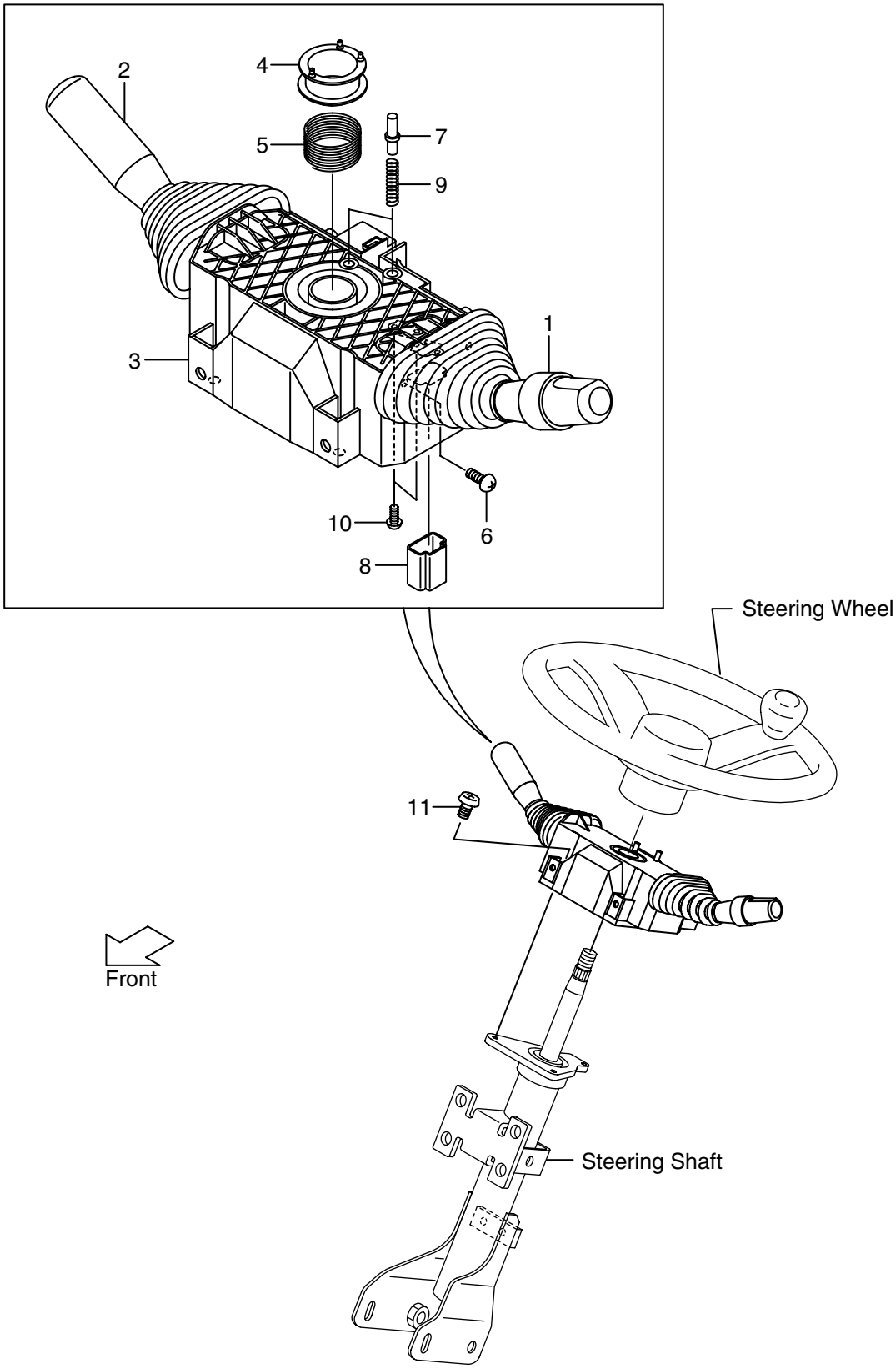

FIG. 19
(BD012670)

A: FB10-8 B: FB15-8 C: FB18-8

Item No.	Part No.	Mark	Description	Req'd	Remarks : serial No.
A1	509K2-30101		COMBINATION SWITCH ASSY	1	INC.1-10
1	280C2-42301		SWITCH,TURN SIGNAL	1	
2	280C2-42311		SWITCH,DIRECTION	1	
3	NO PART NO.	#	BODY	1	
4	NO PART NO.	#	CAM,CANCEL,LH	1	
5	NO PART NO.	#	SPRING	1	
6	280C2-42351		SCREW	7	
7	NO PART NO.	#	CONTACT,HORN	2	
8	NO PART NO.	#	CORD	1	
9	NO PART NO.	#	SPRING	2	
10	NO PART NO.	#	SCREW	2	
11	01033-05014		SCREW	3	

FIG. 20 DRIVE UNIT
(BD012510) ﾄﾞﾗｲﾌﾞﾕﾆｯﾄ

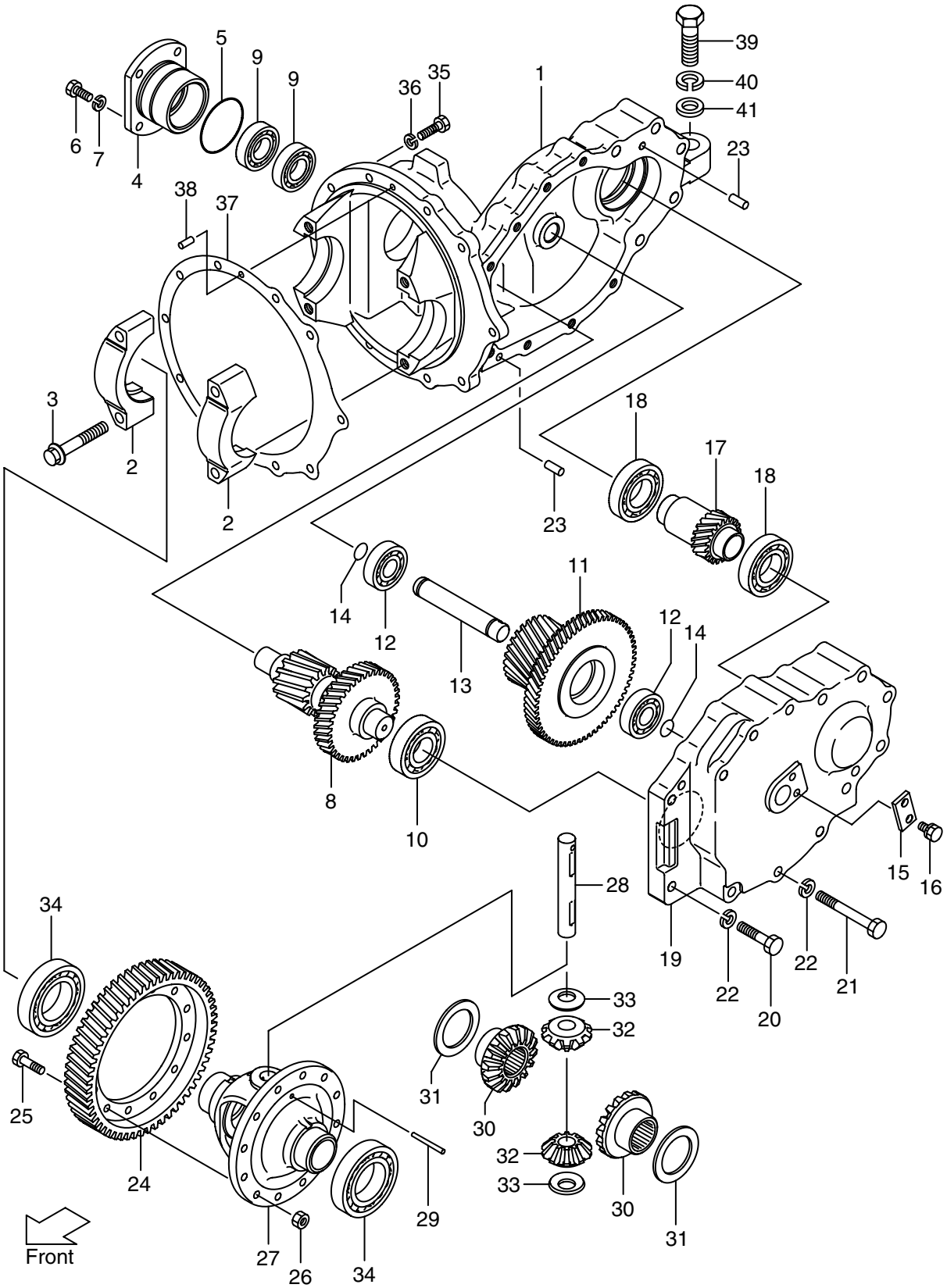

FIG. 20

(BD012510)

A: FB10-8 B: FB15-8 C: FB18-8

Item No.	Part No.	Mark	Description	Req'd	Remarks : serial No.
A1	181E2-50002		DRIVE UNIT ASSY	1	INC.1-34
A2	181E2-50202		REAR CASE ASSY	1	INC.1-3
1	NO PART NO.	#	CASE,REAR	1	
2	NO PART NO.	#	CAP,BEARING	2	
3	116G3-22001		BOLT	4	
4	177H3-22021		CASE,BEARING	1	
5	03310-00750		O RING	1	
6	01103-10025		BOLT	4	
7	02011-00010		WASHER	4	
8	181E3-22021		GEAR,COUNTER	1	
9	03000-06206		BEARING	2	
10	03000-06307		BEARING	1	
11	181E3-22011		GEAR,COUNTER	1	
12	03000-06305		BEARING	2	
13	177H3-22051		SHAFT	1	
14	03300-00210		O RING	2	
15	23648-50161		PLATE,KEY	1	
16	01184-10016		BOLT&WASHER	2	
17	181E3-22001		PINION	1	
18	03000-06208		BEARING	2	
19	181E3-22211		COVER	1	
20	01103-12055		BOLT	2	
21	01103-12100		BOLT	6	
22	02011-00012		WASHER	8	
23	02212-10025		PIN,PARALLEL	2	
24	181E3-52001		GEAR,RING	1	
25	10113-50112		BOLT	12	
26	15583-82601		NUT	12	
27	12193-50011		CASE,CROSS	1	
28	10193-50032		SHAFT,PINION	1	
29	02242-06055		PIN,TAPER	1	
30	110F3-52001		GEAR,SIDE	2	
31	20113-50181		WASHER,THRUST	2	
32	110F3-52011		PINION,GEAR	2	
33	15413-52081		WASHER	2	
34	03000-06211		BEARING	2	
35	01106-10035		BOLT	10	
36	02011-00010		WASHER	10	
37	277H2-52011		PACKING	1	
38	02212-08020		PIN,PARALLEL	1	
39	01103-20070		BOLT	1	
40	02011-00020		WASHER	1	
41	181E3-22051		WASHER	1	

FIG. 21 DRIVE AXLE
(BD013010) ﾄﾞﾗｲﾌﾞｱｸｽﾙ

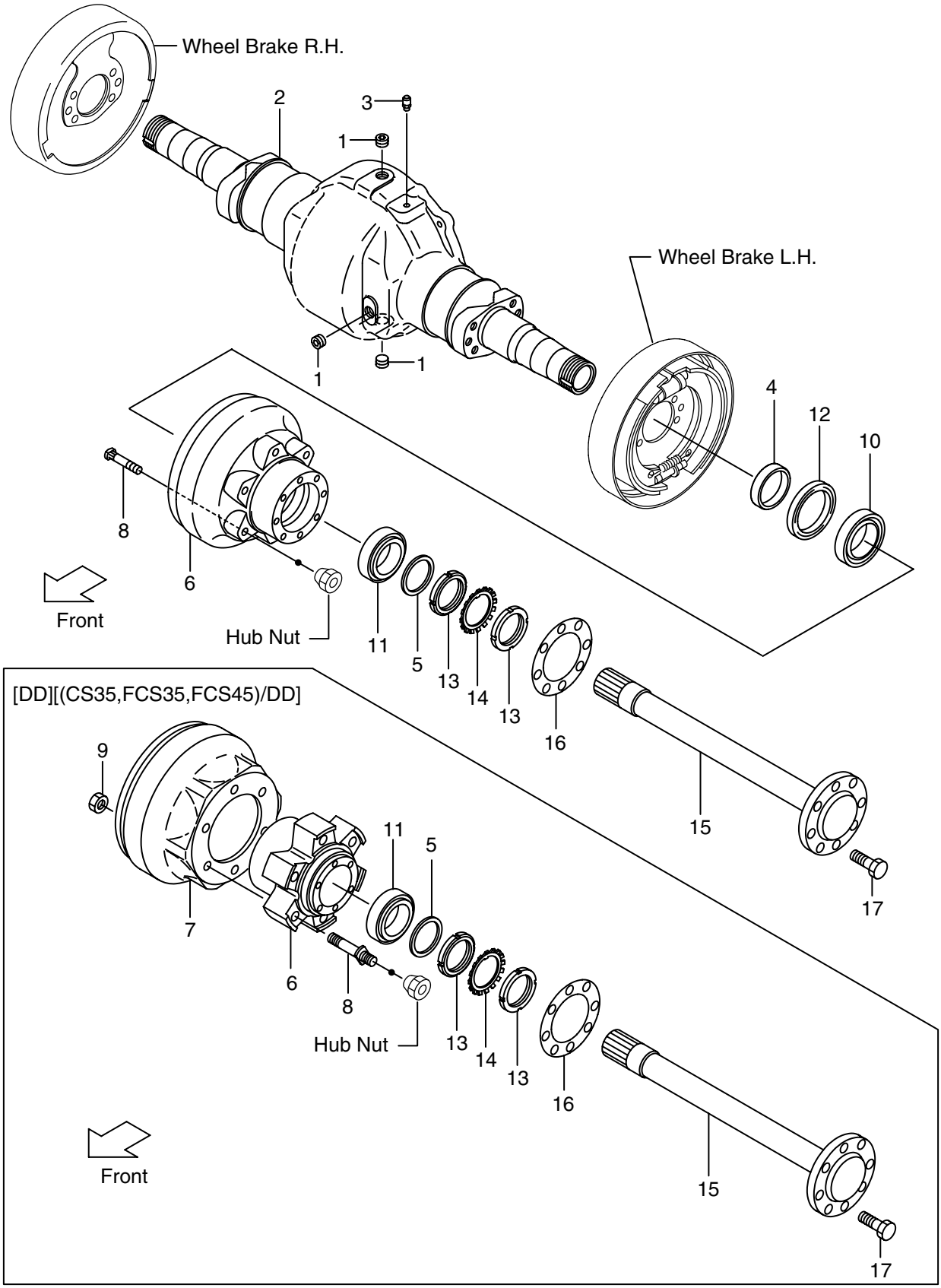

FIG. 21

(BD013010)

A: FB10-8 B: FB15-8 C: FB18-8

Item No.	Part No.	Mark	Description	Req'd	Remarks : serial No.
1	12163-82541		PLUG	3	
2	281E3-02001		HOUSI NG,AXLE	1	
3	15573-42151		BREATHER,AIR	1	
4	22513-02051		RETAINER	2	
5	23453-02091		WASHER	2	
6	216G3-02051		HUB & DRUM	2	
-	54237-42042		HUB	2	DD, (CS35,FCS35,FCS45)/DD
-	216G3-02051		HUB & DRUM	2	CS35,FCS35,FCS45
7	54237-42072		DRUM	2	DD, (CS35,FCS35,FCS45)/DD
8	216G3-02061		BOLT	12	
-	54237-42061		BOLT	12	DD, (CS35,FCS35,FCS45)/DD
-	216G3-02061		BOLT	12	CS35,FCS35,FCS45
9	01400-10012		NUT	12	DD, (CS35,FCS35,FCS45)/DD
10	03071-30213		BEARING	2	
11	23453-02071		BEARING	2	
12	23653-02001		SEAL,OIL	2	
13	03192-00012		NUT	4	
14	03192-10012		WASHER	2	
15	24843-02011		SHAFT,DRIVE	2	
16	24843-02062		PACKING	2	
17	24453-02061		BOLT	16	

FIG. 22 WHEEL BRAKE
(BD013710) ﾎｲｰﾙﾌﾞﾚｰｷ

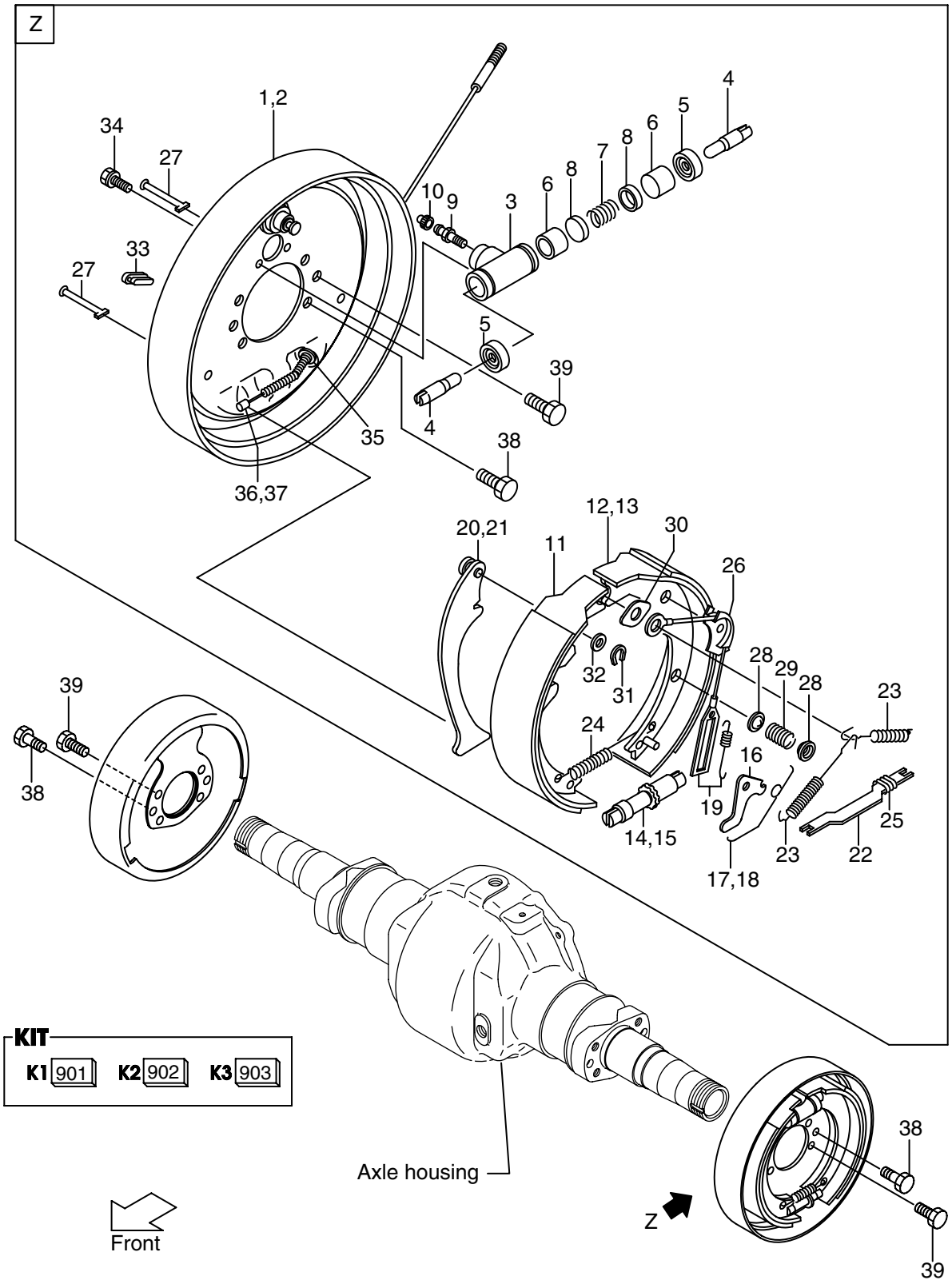

FIG. 22

(BD013710)

A: FB10-8 B: FB15-8 C: FB18-8

Item No.	Part No.	Mark	Description	Req'd	Remarks : serial No.
A1	281E3-70011		BRAKE ASSY,WHEEL,RH	1	INC.1,3-12,14,16,17,19,20, 22-36
A2	281E3-70001		BRAKE ASSY,WHEEL,LH	1	INC.2-11,13,15,16,18,19, 21-35,37
901	C-K2-11053-83021	K1	KIT,SHOE,RH	1	INC.11,12
902	C-K2-11053-83011	K2	KIT,SHOE,LH	1	INC.11,13
903	23453-79801	K3	KIT,REPAIR	2	INC.5-8
1	C-52-11038-21002		PLATE,RH	1	
2	C-52-11038-11002		PLATE,LH	1	
A3	C-52-11029-52000		CYLINDER ASSY,WHEEL	2	INC.3-10
3	C-52-11029-52120		CYLINDER	2	
4	C-52-11003-02380		LINK	4	
5	C-52-11001-02310	*	BOOT	4	
6	C-52-11003-02210	*	PISTON	4	
7	C-52-10901-52264	*	SPRING	2	
8	C-90-5522-0140	*	CUP	4	
9	C-90-6000-0731		SCREW	2	
10	C-90-6200-0700		CAP,BLEEDER	2	
11	NO PART NO.	# *	SHOE & LINING	2	
12	NO PART NO.	# *	SHOE & LINING,RH	1	
13	NO PART NO.	# *	SHOE & LINING,LH	1	
14	C-52-11044-23300		SCREW,ADJUST,RH	1	
15	C-52-11044-13300		SCREW,ADJUST,LH	1	
16	C-52-10910-05150		LEVER	2	
17	C-52-11036-25160		SPRING,RH	1	
18	C-52-11036-15160		SPRING,LH	1	
19	20803-71081		SPRING & CABLE	2	
20	C-52-11005-44500		LEVER,PARKING,RH	1	
21	C-52-12503-34500		LEVER,PARKING,LH	1	
22	C-52-11003-64530		STRUT	2	
23	C-52-11003-04010		SPRING	4	
24	C-52-11036-54070		SPRING	2	
25	C-52-11036-54540		SPRING	2	
26	C-52-11003-05140		GUIDE,CABLE	2	
27	C-52-10906-04160		PIN	4	
28	C-52-10927-04130		CUP	8	
29	C-52-11101-04111		SPRING	4	
30	C-52-11201-01270		PLATE,SHOE GUIDE	2	
31	C-52-10901-64560		RETAINER	2	
32	C-52-10901-64550		WASHER,WAVE	2	
33	C-52-11204-69010		COVER	4	
34	C-90-0527-0616		BOLT	4	
35	C-90-9200-0800		E RING	2	
36	C-52-11036-24606		CABLE,RH	1	
37	C-52-11036-14606		CABLE,LH	1	
38	210F3-72001		BOLT,REAMER	4	
39	214A3-02001		BOLT	8	

FIG. 23 STEERING WHEEL UNIT

(BD014110) ｽﾃｱﾘﾝｸﾞ ﾎｲｰﾙﾕﾆｯﾄ

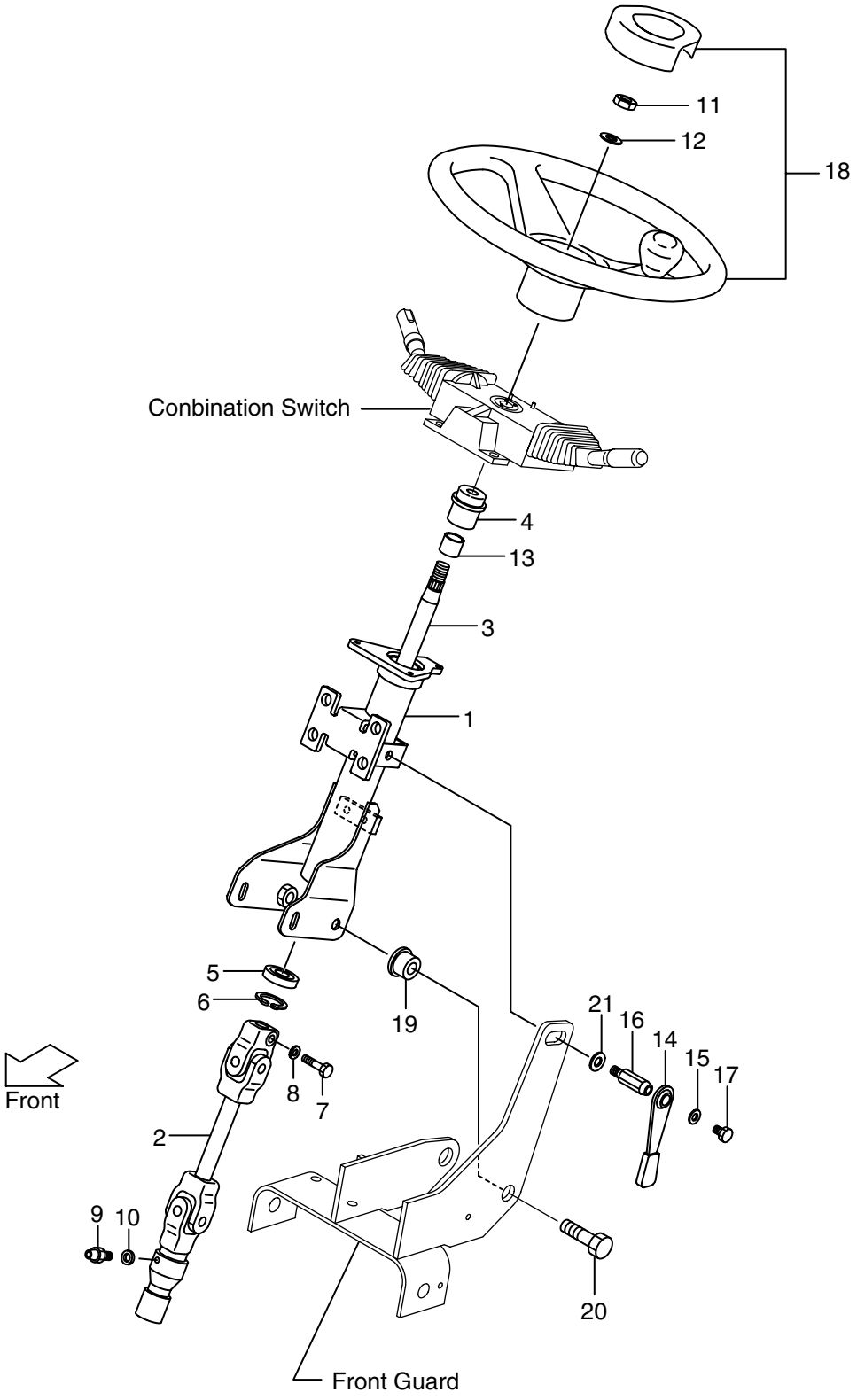

FIG. 23

(BD014110)

A: FB10-8 B: FB15-8 C: FB18-8

Item No.	Part No.	Mark	Description	Req'd	Remarks : serial No.
A1	281E4-10001		STEERING SHAFT ASSY	1	INC.1-13
1	239A4-12112		COLUMN	1	
2	281E4-12121		JOINT,UNIVERSAL	1	
3	239A4-12131		SHAFT	1	
4	NO PART NO.	#	BUSHING,COLUMN	1	
5	NO PART NO.	#	BEARING,BALL	1	
6	NO PART NO.	#	RING,SNAP	1	
7	NO PART NO.	#	BOLT	1	
8	NO PART NO.	#	WASHER	1	
9	243C4-12101		FITTING	1	
10	02000-00006		WASHER	1	
11	01402-00014		NUT	1	
12	14354-12271		WASHER	1	
13	243C4-12021		BUSHING	1	
A2	239A4-12402		TILT LOCK LEVER ASSY	1	INC.14-17
14	239A4-12411		LEVER	1	
15	214A4-12161		WASHER	1	
16	239A4-12431		BOLT	1	
17	239A4-12441		BOLT	1	
18	27P14-10301-C		STEERING WHEEL	1	SEE FIG.24
19	216G4-12101		BUSHING	2	
20	216G4-12111		BOLT	2	
21	02000-00012		WASHER	1	

FIG. 24 STEERING WHEEL (INNER PARTS)
(BD014140) ｽﾃｱﾘﾝｸﾞ ﾎｲｰﾙ (ｲﾝﾅﾊﾟｰﾂ)

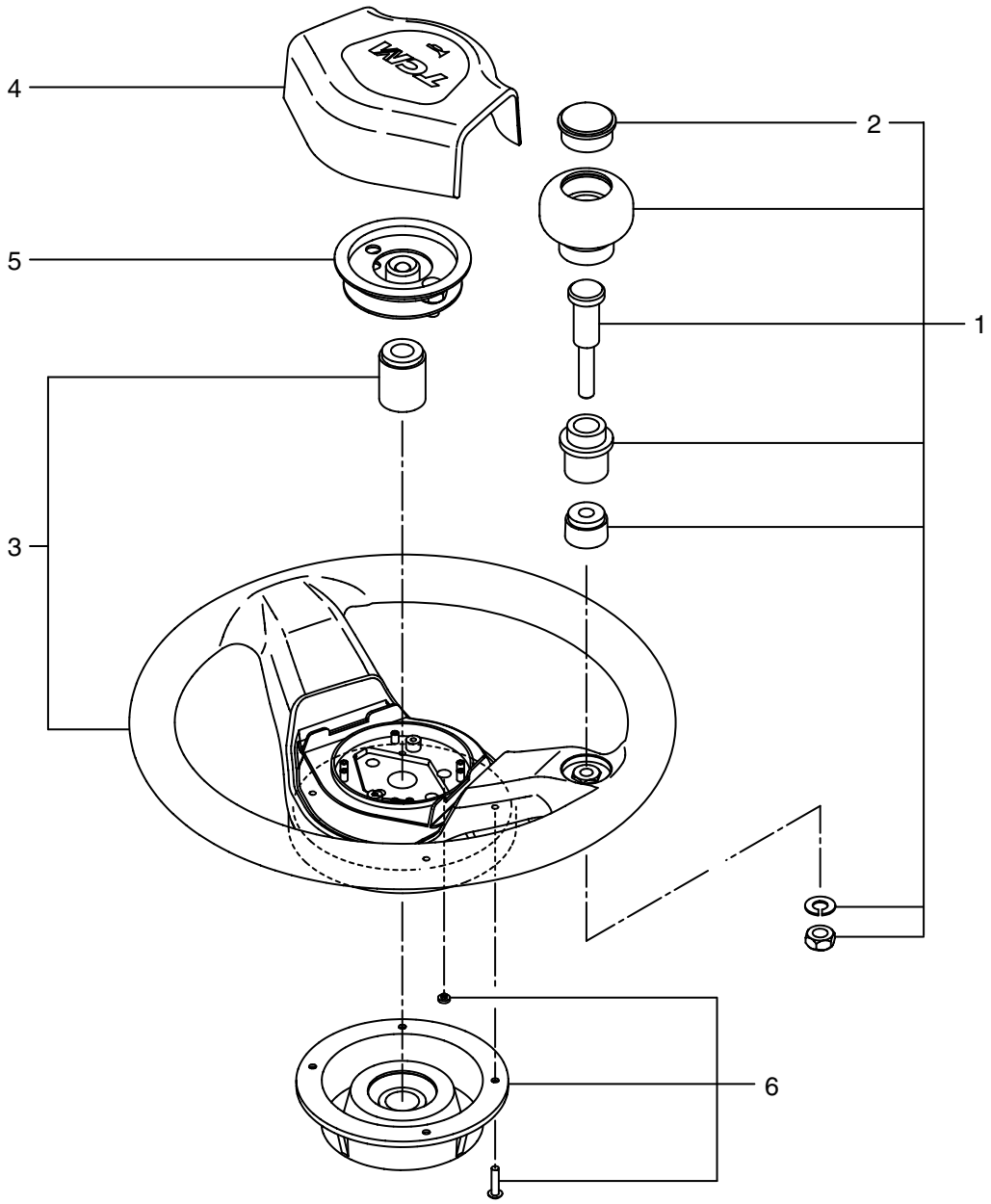

FIG. 24

(BD014140)

A: FB10-8 B: FB15-8 C: FB18-8

Item No.	Part No.	Mark	Description	Req'd	Remarks : serial No.
A	27P14-10301-C		STEERING WHEEL ASSY	1	INC.1-6
1	216G4-12681-C		KNOB	1	INC.2
2	216G4-12711-C		CAP	1	
3	27P14-12401		WHEEL,STEERING	1	
4	22N54-12411		PAD,HORN	1	
5	22N54-13001		SWITCH	1	
6	209K4-12551-C		COVER	1	

FIG. 25 GEAR BOX
(BD014120) ｷﾞﾔｰﾎﾞｯｸｽ

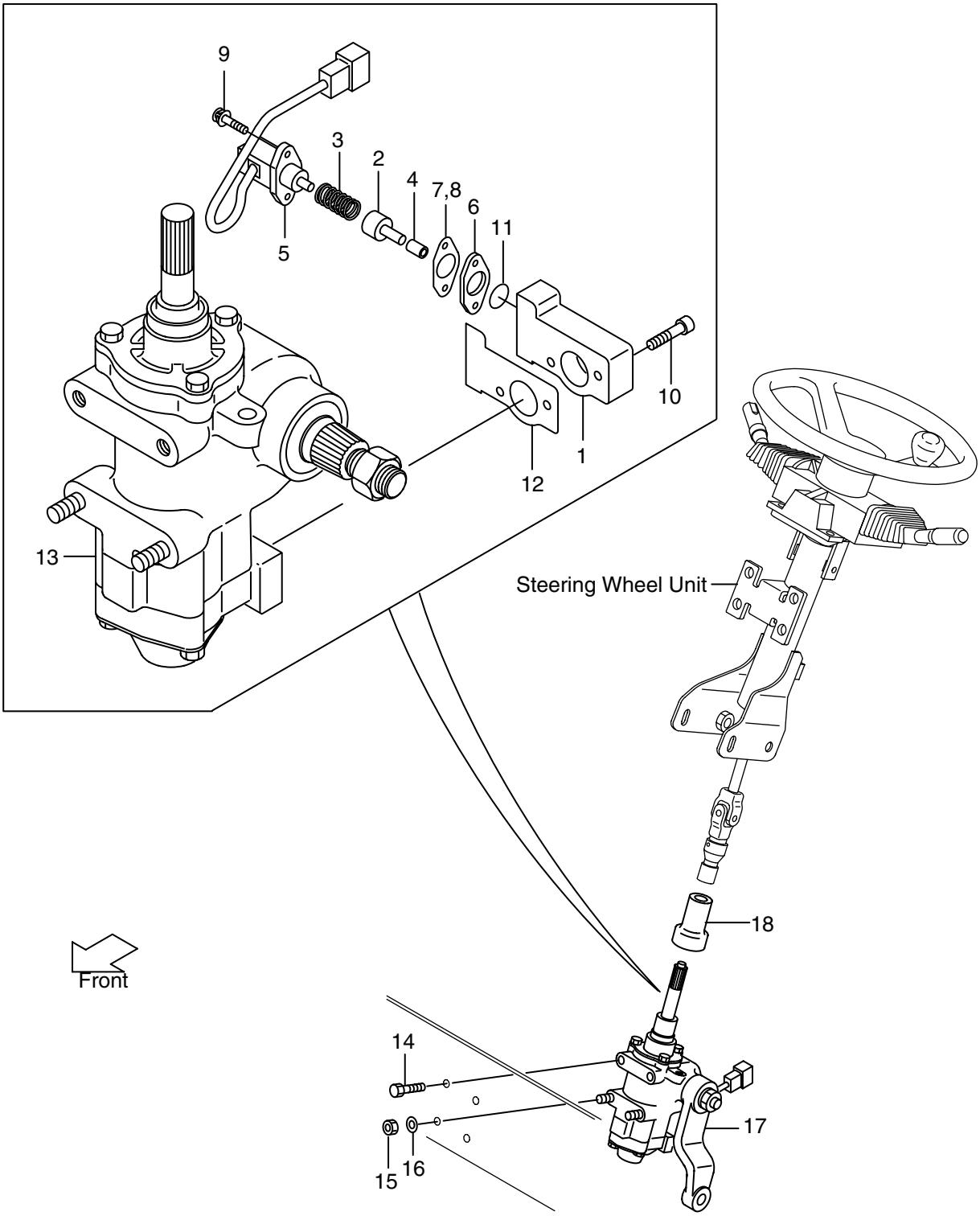

FIG. 25

(BD014120)

A: FB10-8 B: FB15-8 C: FB18-8

Item No.	Part No.	Mark	Description	Req'd	Remarks : serial No.
A1	281E4-10201		STEERING GEAR BOX ASSY	1	INC.1-13
1	281E4-12201		HOUSING	1	
2	281E4-12211		SHAFT	1	
3	281E4-12221		SPRING	1	
4	281E4-12231		BUSHING	1	
5	281E4-12241		METER,POTENTION	1	
6	281E4-12251		SPACER	2	
7	281E4-12261		SHIM,T-0.2	4	
8	281E4-12271		SHIM,T-1.0	1	
9	281E4-12281		SCREW	2	
10	281E4-12291		SCREW	2	
11	03350-00160		O RING	1	
12	281E4-12301		GASKET	1	
13	NO PART NO.	#	BOX,STEERING	1	
14	216G4-12251		BOLT	2	
15	281E4-12001		NUT	2	
16	02010-20012		WASHER	2	
17	271A4-22001		ARM,PITMAN	1	
18	277H4-12001		BOOT	1	

FIG. 26 STEERING SHAFT COVER

(BD014130) ｽﾃｱﾘﾝｸﾞ ｼｬﾌﾄｶﾊﾞｰ

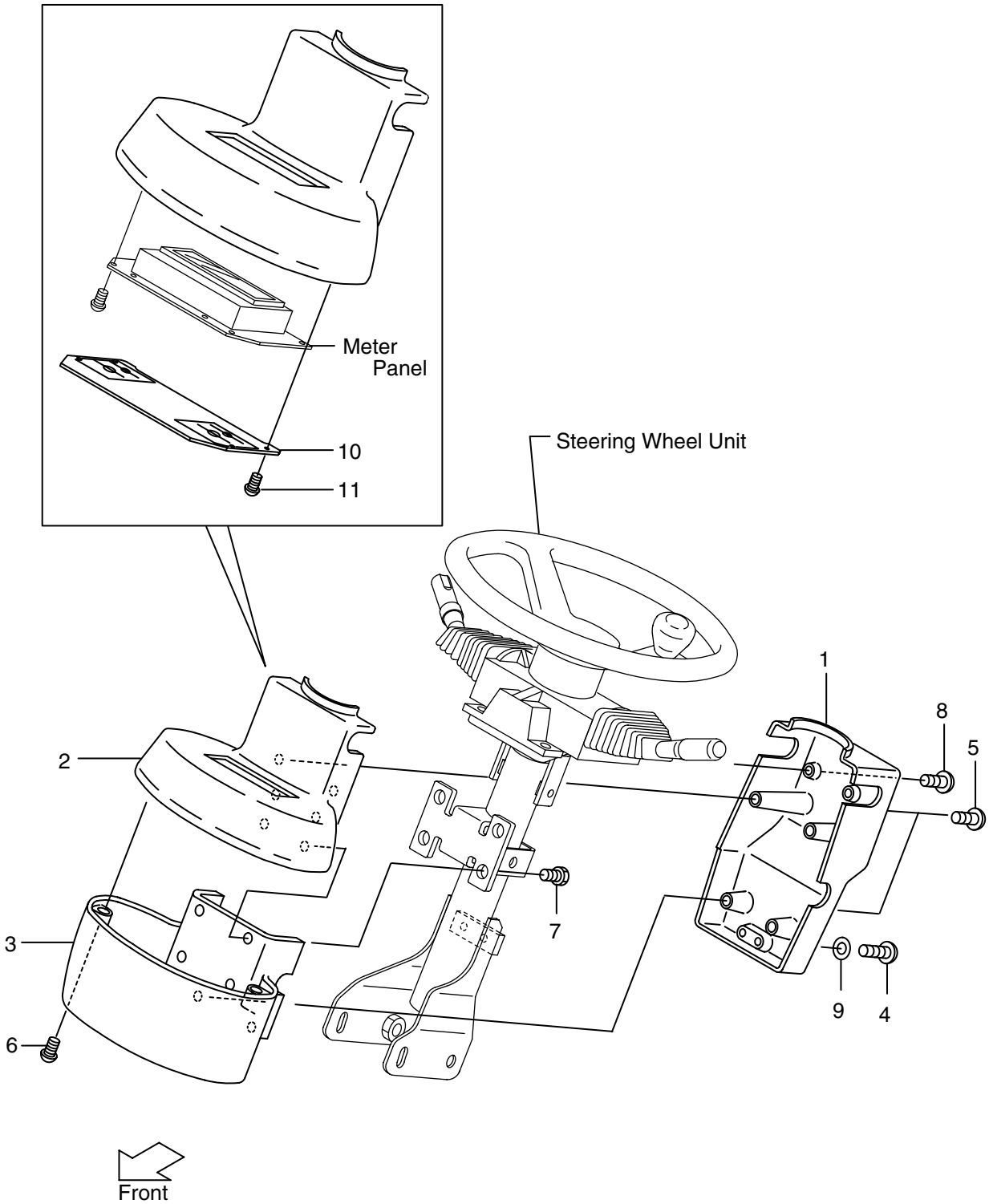

FIG. 26

(BD014130)

A: FB10-8 B: FB15-8 C: FB18-8

Item No.	Part No.	Mark	Description	Req'd	Remarks : serial No.
1	27P14-12501		COVER,(A)	1	
2	27P14-12511		COVER,(B)	1	
3	280C4-12002		COVER,(C)	1	
4	214A6-42771		SCREW	2	
5	222A2-42031		SCREW	4	
6	216G4-12091		SCREW	2	
7	01185-06016		BOLT	4	
8	209K2-43001		SCREW	2	
9	02000-00005		WASHER	2	
10	27P14-12521		COVER,REAR	1	
11	214A6-42781		SCREW	4	

FIG. 27 DRAG LINK
(BD014210) ﾄﾞﾗｯｸﾞﾘﾝｸ

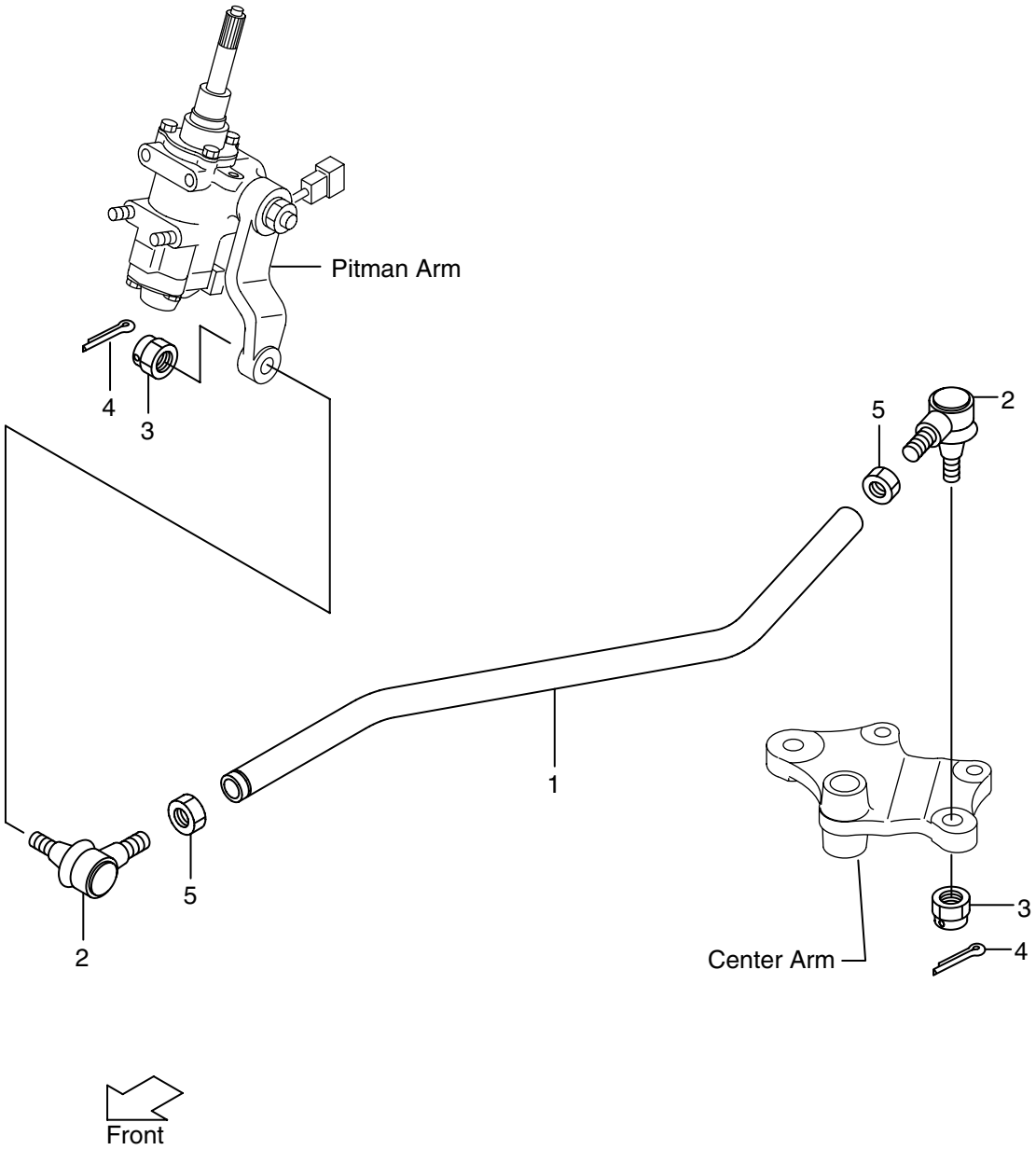

FIG. 27

(BD014210)

A: FB10-8 B: FB15-8 C: FB18-8

Item No.	Part No.	Mark	Description	Req'd	Remarks : serial No.
1	281E4-22002		LINK,DRAG	1	A,B
-	281H4-22001		LINK,DRAG	1	C
A1	24234-30551		ROD END ASSY,RH	2	INC.2-4
2	NO PART NO.	#	END,ROD	2	
3	01412-10016		NUT	2	
4	02200-32032		PIN,COTTER	2	
5	01402-00022		NUT	2	

FIG. 28 STEERING AXLE

(BD014310) ｽﾃｱﾘﾝｸﾞ ｱｸｽﾙ

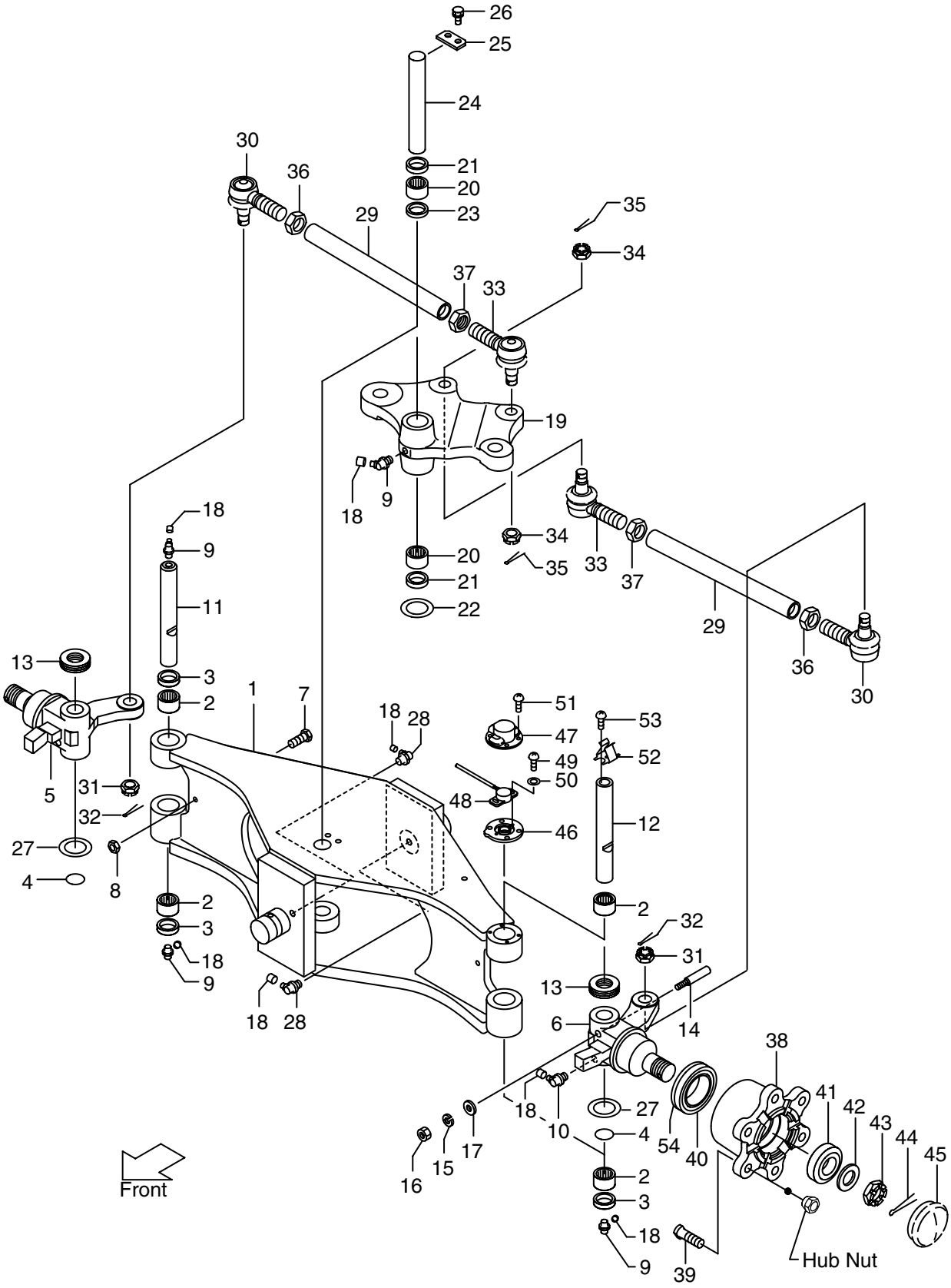

FIG. 28
(BD014310)

A: FB10-8 B: FB15-8 C: FB18-8

Item No.	Part No.	Mark	Description	Req'd	Remarks : serial No.
A1	27P14-30101		STEERING AXLE ASSY	1	INC.1-45
1	27P14-30201		AXLE,STEERING	1	
2	22574-32062		BEARING	4	
3	24234-32231		SEAL,OIL	3	
4	24234-32241		O RING	2	
5	281E4-30052		KNUCKLE,RH	1	
6	27P14-30601		KNUCKLE,LH	1	
7	01120-10025		BOLT	2	
8	01402-00010		NUT	2	
9	04901-00160		FITTING,GREASE	4	
10	04901-00100		FITTING,GREASE	1	
11	281E4-32101		PIN,KING	1	
12	27P14-32151		PIN,KING	1	
13	22194-32222		BEARING	2	
14	20114-30081		PIN,LOCK	2	
15	02010-00008		WASHER	2	
16	01400-00008		NUT	2	
17	02000-00008		WASHER	2	
18	22199-12401		CAP	7	
A2	27P14-30301		CENTER ARM ASSY	1	INC.19-23
19	27P14-30311		ARM,CENTER	1	
20	22574-32062		BEARING	2	
21	24234-32231		SEAL,OIL	2	
22	20114-30091		SHIM,T-0.2	1	
23	24234-32123		SPACER	1	
24	27P14-32131		PIN	1	
25	20224-30061		PLATE,SET	1	
26	01183-08016		BOLT&WASHER	2	
27	20114-30091		SHIM,T-0.2	4	
28	04901-00191		FITTING,GREASE	2	
A3	27414-30301		TIE ROD ASSY	2	INC.29-37
A4	24234-30551		ROD END ASSY,RH	2	INC.30-32
29	27414-32021		ROD,TIE	2	
30	NO PART NO.	#	END,ROD,RH	2	
31	01412-10016		NUT	2	
32	02200-32032		PIN,COTTER	2	
A5	24234-30561		ROD END ASSY,LH	2	INC.33-35
33	NO PART NO.	#	END,ROD,LH	2	
34	01412-10016		NUT	2	
35	02200-32032		PIN,COTTER	2	
36	24234-32411		NUT,RH	2	
37	24234-32421		NUT,LH	2	
A6	27414-30401		REAR HUB ASSY	2	INC.38-41
38	27414-32031		HUB	2	
39	23654-32041		BOLT	12	
40	23453-02071		BEARING	2	INC.54
41	03071-30206		BEARING	2	
42	02000-00030		WASHER	2	
43	01412-00030		NUT	2	
44	02200-06055		PIN,COTTER	2	

FIG. 28
(BD014310)

A: FB10-8 B: FB15-8 C: FB18-8

Item No.	Part No.	Mark	Description	Req'd	Remarks : serial No.
45	22194-32361		CAP	2	
46	27P14-32221		ADAPTER	1	
47	27P14-32241		COVER	1	
48	22N54-32211		POTENTIOMETER	1	
49	01030-04008		BOLT	2	
50	02000-00004		WASHER	2	
51	01030-06010		SCREW	4	
52	22N54-33052		SPRING	1	
53	01030-05008		SCREW	2	
54	23453-02131		SEAL,OIL	2	

MEMO

FIG. 29 AXLE SUPPORT
(BD014320) アクスルサポート

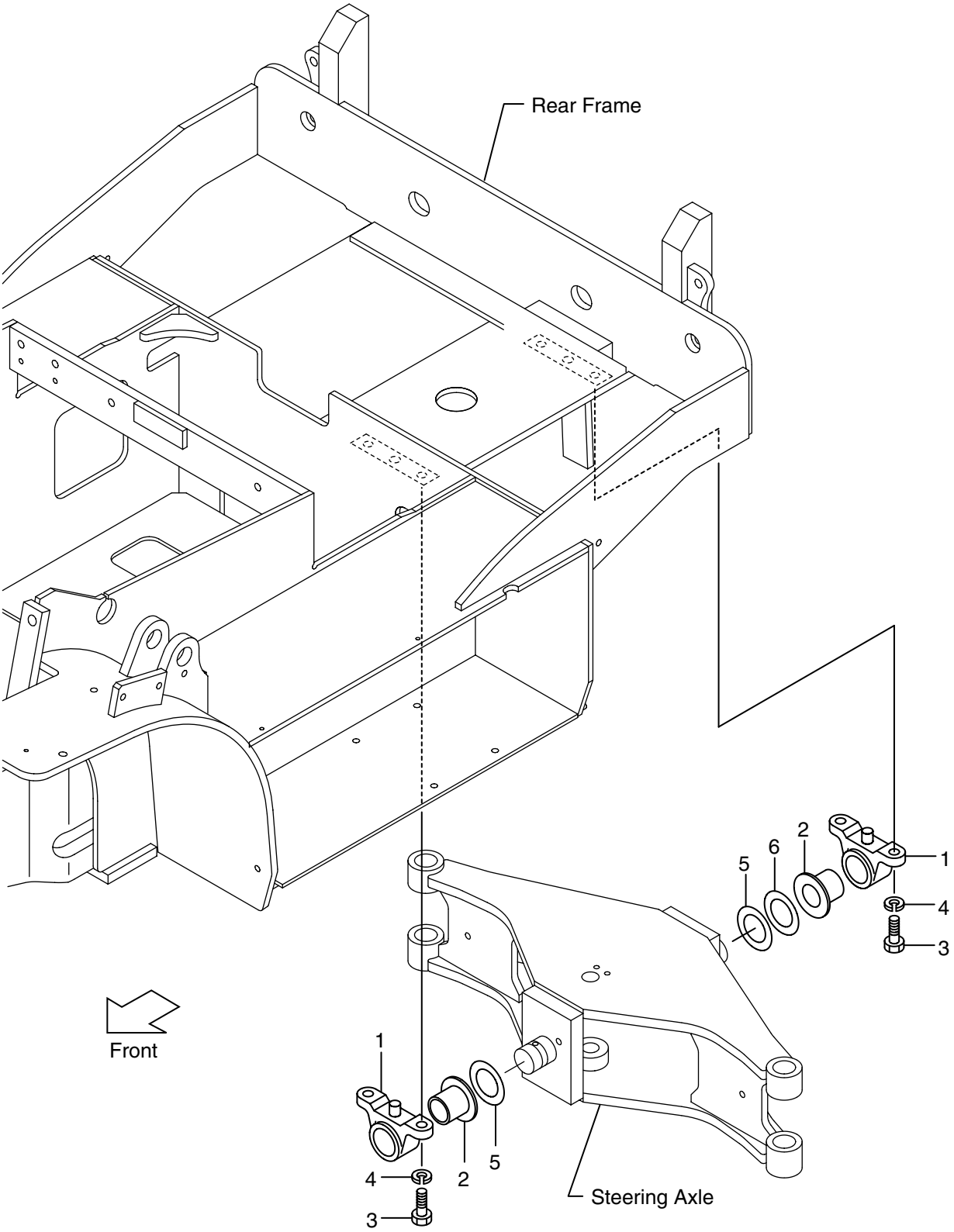

FIG. 29
(BD014320)

A: FB10-8 B: FB15-8 C: FB18-8

Item No.	Part No.	Mark	Description	Req'd	Remarks : serial No.
1	24236-12572		SUPPORT	2	
2	24236-12581		BUSHING	2	
3	01100-14040		BOLT	4	
4	02010-00014		WASHER	4	
5	23458-52031		SHIM,T-1.0	2	
6	24234-32501		SHIM,T-0.5	1	

FIG. 30 HUB NUT
(BD014410) ﾊﾌﾞﾅｯﾄ

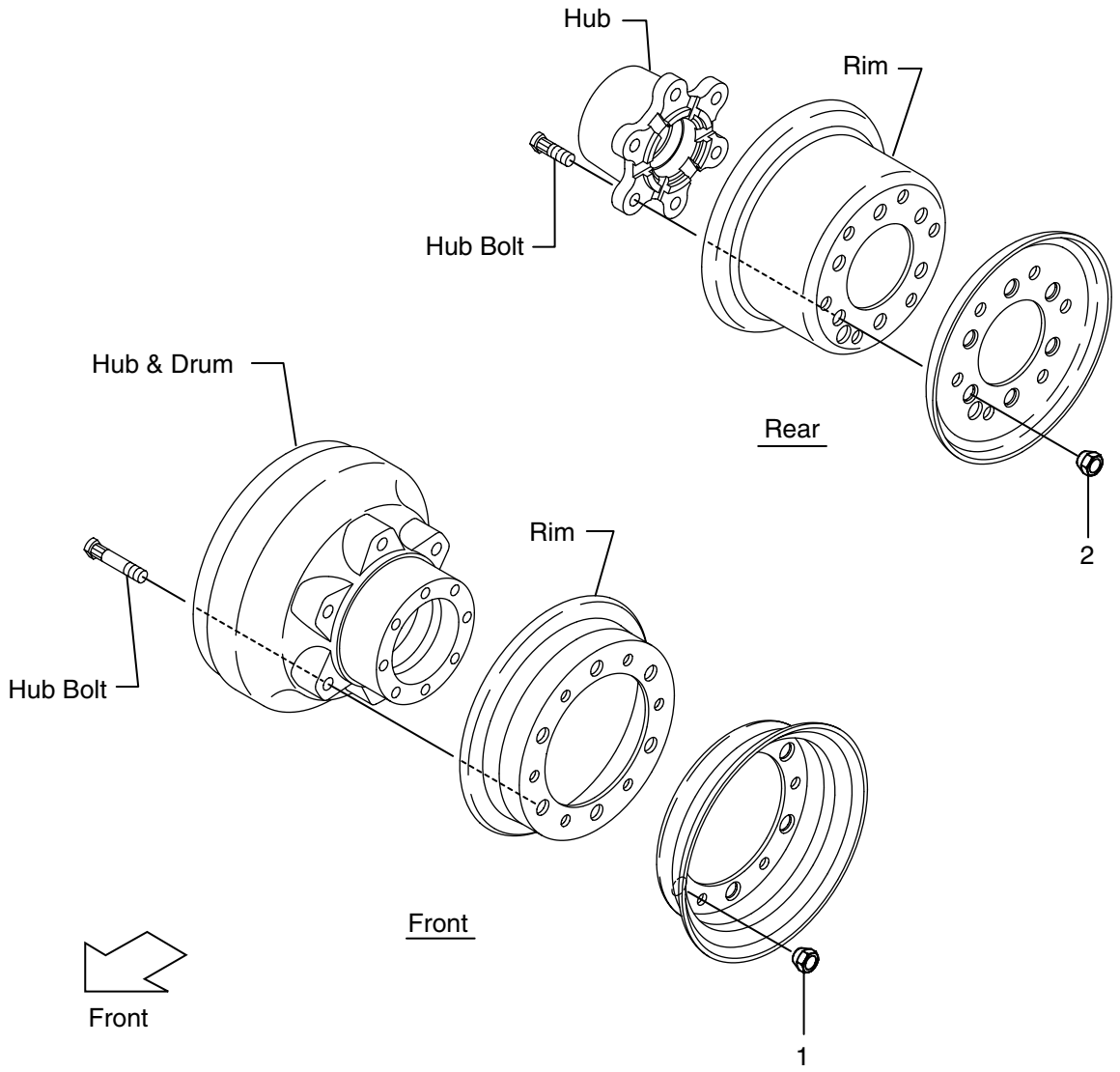

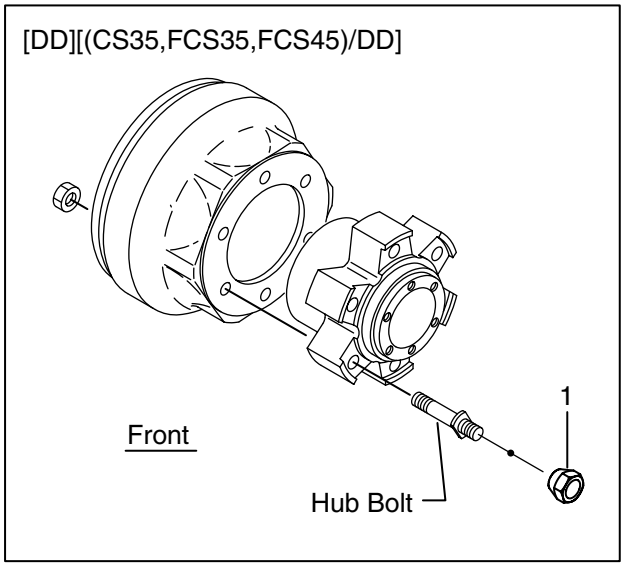

FIG. 30
(BD014410)

A: FB10-8 B: FB15-8 C: FB18-8

Item No.	Part No.	Mark	Description	Req'd	Remarks : serial No.
1	23654-34051		NUT,HUB	12	
-	23654-34051		NUT,HUB	12	DD
-	57045-52151		NUT,HUB	12	FC,CS35,FCS35,FCS45
-	57045-52151		NUT,HUB	12	DD/(FC,CS35,FCS35,FCS45)
2	23654-34051		NUT,HUB	12	
-	581E5-52051		NUT,HUB	12	FC,CS35,FCS35,FCS45

FIG. 31 FRONT WHEEL
(BD014430) フロントホイール

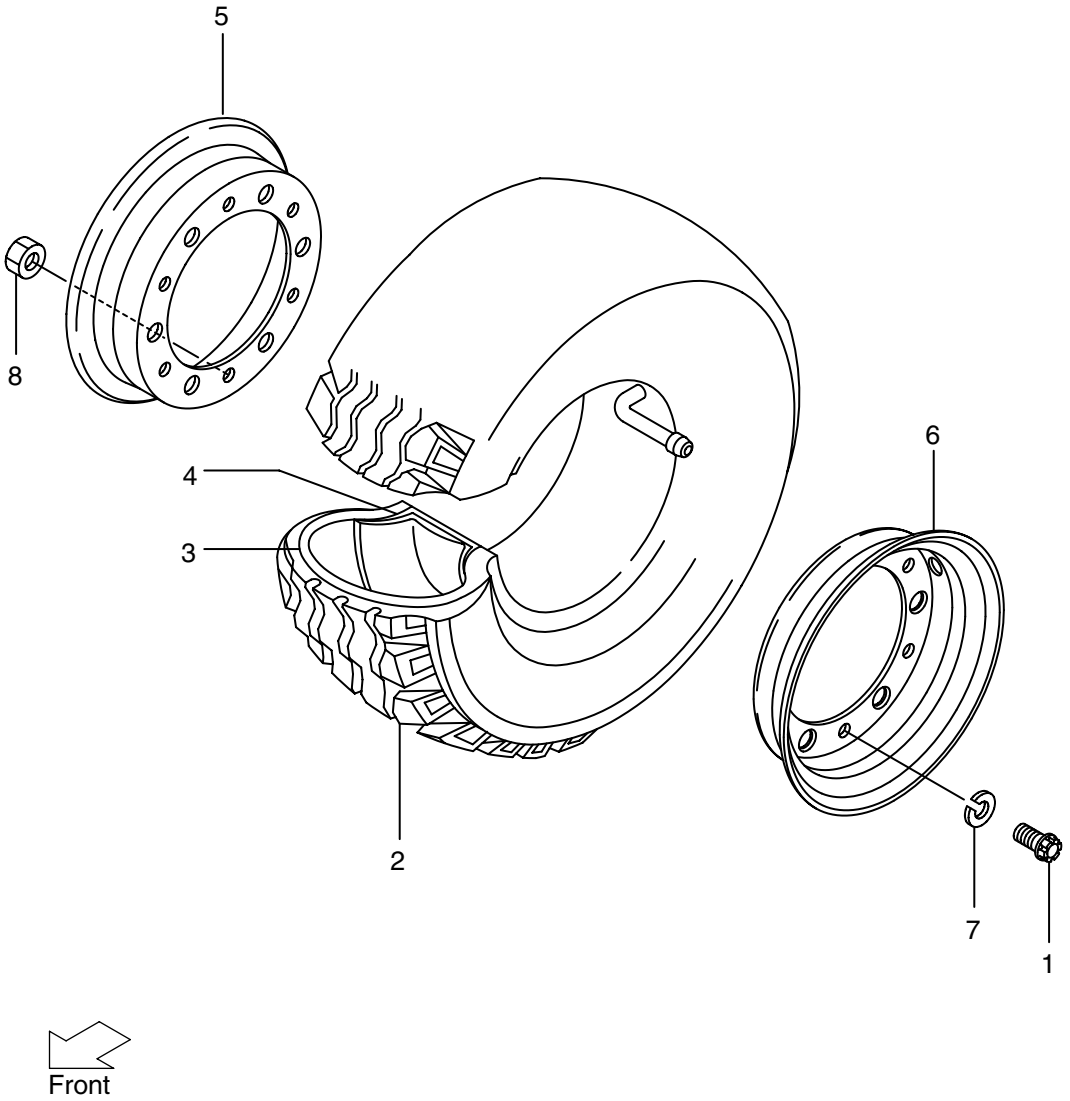

FIG. 31

(BD014430)

A: FB10-8 B: FB15-8 C: FB18-8

Item No.	Part No.	Mark	Description	Req'd	Remarks : serial No.
A1	281E4-40101		FRONT TIRE ASSY	2	A,B INC.1-8
-	281H4-40101		FRONT TIRE ASSY	2	C INC.1-8
A2	281E4-40131		TIRE ASSY	2	A,B INC.2-4
-	281H4-40131		TIRE ASSY	2	C INC.2-4
1	514A3-82611		BOLT	12	
2	281E4-42001		TIRE,6.00-9-10PR	2	A,B
-	281H4-42001		TIRE,6.00-9-12PR	2	C
3	06712-60009		TUBE	2	
4	06702-60009		FLAP	2	
A3	281E4-40121		RIM ASSY	2	INC.5,6
5	NO PART NO.	#	RIM,INSIDE	2	
6	NO PART NO.	#	RIM,OUTSIDE	2	
7	02011-00012		WASHER	12	
8	01400-10012		NUT	12	

FIG. 32 FRONT WHEEL [TJF]
(BD014440) フロントホイール

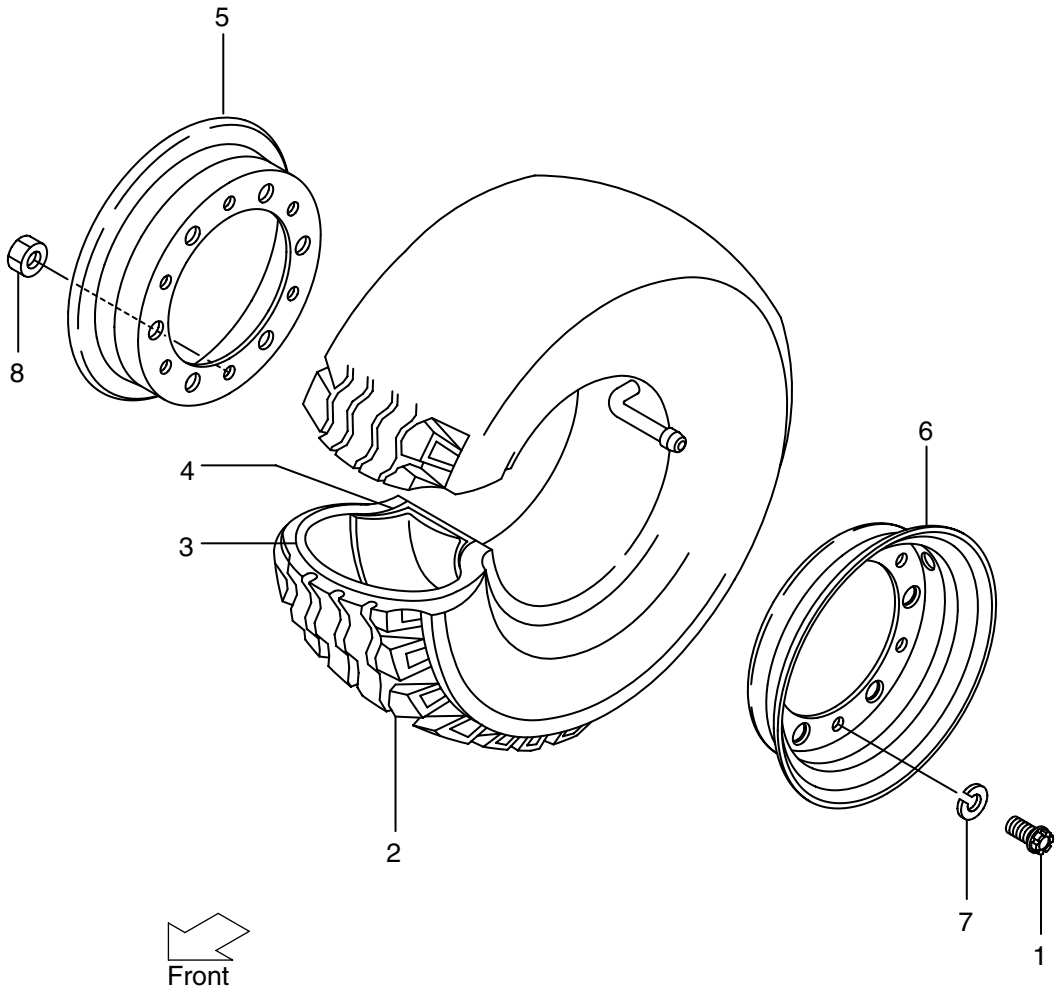

FIG. 32

(BD014440)

A: FB10-8 B: FB15-8 C: FB18-8

Item No.	Part No.	Mark	Description	Req'd	Remarks : serial No.
A1	281H4-40101		FRONT TIRE ASSY	2	C
					INC.1-8
1	514A3-82611		BOLT	12	C
A2	281H4-40131		TIRE ASSY	2	C
					INC.2-4
2	281H4-42001		TIRE,6.00-9-12PR	2	C
3	06712-60009		TUBE	2	C
4	06702-60009		FLAP	2	C
A3	281E4-40121		RIM ASSY	2	C
					INC.5,6
5	NO PART NO.	#	RIM,INSIDE	2	C
6	NO PART NO.	#	RIM,OUTSIDE	2	C
7	02011-00012		WASHER	12	C
8	01400-10012		NUT	12	C

FIG. 33 FRONT WHEEL [TRF]
(BD014450) フロントホイール

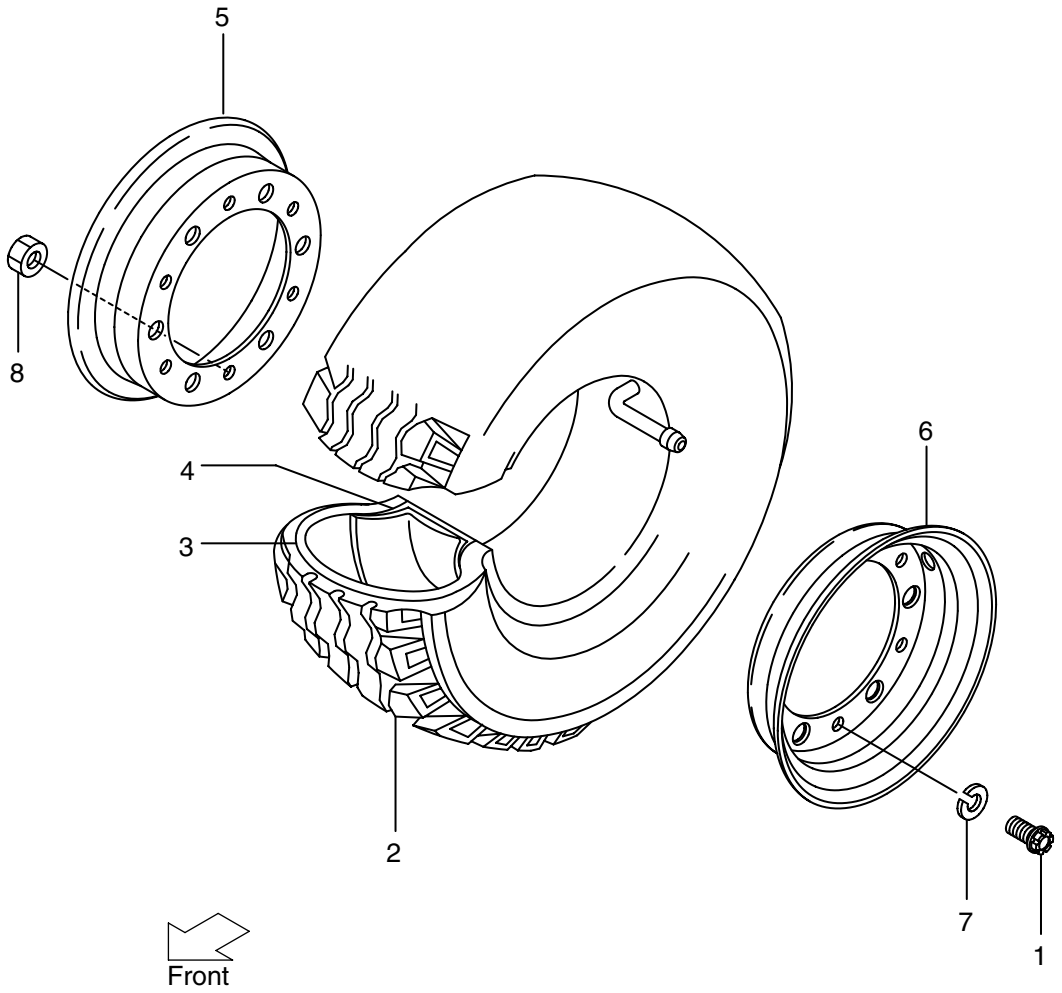

FIG. 33

(BD014450)

A: FB10-8 B: FB15-8 C: FB18-8

Item No.	Part No.	Mark	Description	Req'd	Remarks : serial No.
A1	281E4-40101		FRONT TIRE ASSY	2	A,B
					INC.1-8
1	514A3-82611		BOLT	12	A,B
A2	281E4-40131		TIRE ASSY	2	A,B
					INC.2-4
2	281E4-42001		TIRE,6.00-9-10PR	2	A,B
3	06712-60009		TUBE	2	A,B
4	06702-60009		FLAP	2	A,B
A3	281E4-40121		RIM ASSY	2	A,B
					INC.5,6
5	NO PART NO.	#	RIM,INSIDE	2	A,B
6	NO PART NO.	#	RIM,OUTSIDE	2	A,B
7	02011-00012		WASHER	12	A,B
8	01400-10012		NUT	12	A,B

FIG. 34 FRONT WHEEL (UNIQUE) [TUCF,TUSF,TUWF,TUGF]
(BD014460) ﾌﾛﾝﾄﾎｲｰﾙ (ﾕﾆｰｸ)

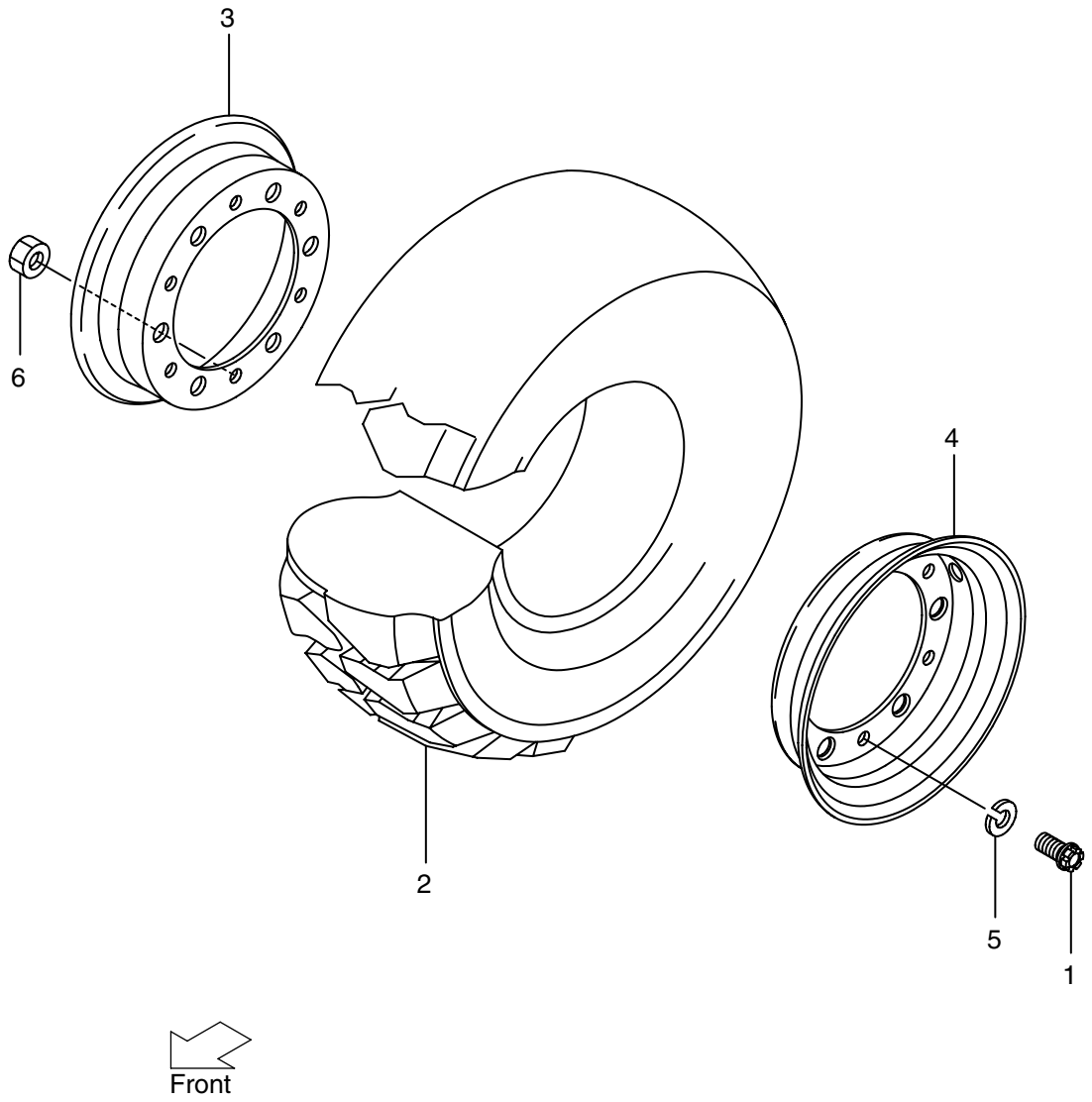

FIG. 34

(BD014460)

A: FB10-8 B: FB15-8 C: FB18-8

Item No.	Part No.	Mark	Description	Req'd	Remarks : serial No.
A1	581E6-80101		FRONT TIRE ASSY	2	INC.1-6 TUCF
-	581E6-80311		FRONT TIRE ASSY	2	INC.1-6 TUSF
-	581E6-80321		FRONT TIRE ASSY	2	INC.1-6 TUWF
-	581E6-80331		FRONT TIRE ASSY	2	INC.1-6 TUGF
1	514A3-82611		BOLT	12	
2	571F6-82251		TIRE,6.00-9	2	TUCF AIC MAKE
-	06801-60009		TIRE,6.00-9	2	TUCF DUN MAKE
-	571F6-82101		TIRE,6.00-9	2	TUSF AIC MAKE
-	06852-60009		TIRE,6.00-9	2	TUSF DUN MAKE
-	06841-60009		TIRE,6.00-9	2	TUWF AIC MAKE
-	06842-60009		TIRE,6.00-9	2	TUWF DUN MAKE
-	06843-60009		TIRE,6.00-9	2	TUGF AIC MAKE
-	06844-60009		TIRE,6.00-9	2	TUGF DUN MAKE
A2	281E4-40121		RIM ASSY	2	INC.3,4
3	NO PART NO.	#	RIM,INSIDE	2	
4	NO PART NO.	#	RIM,OUTSIDE	2	
5	02011-00012		WASHER	12	
6	01400-10012		NUT	12	

FIG. 35 FRONT DOUBLE WHEEL [TJW, TW]
(BD014470) フロントダブルホイール

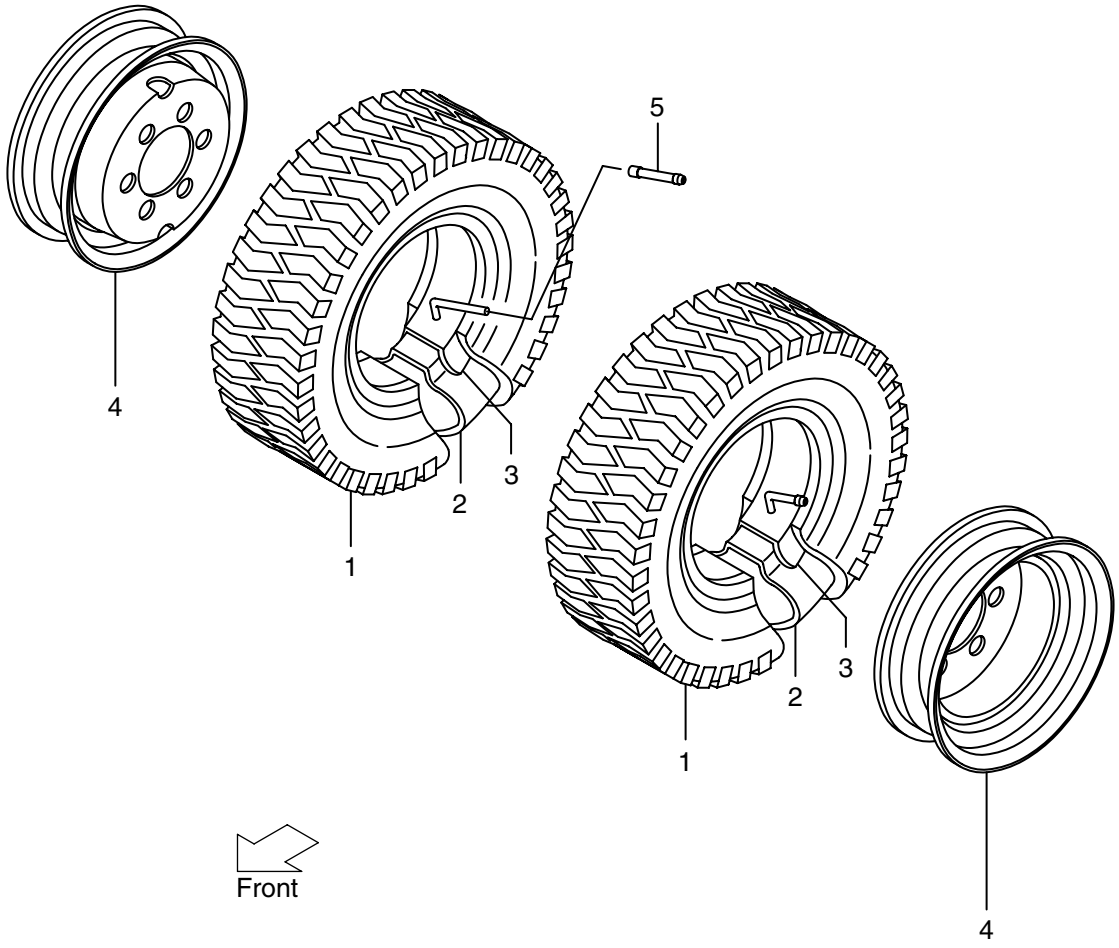

FIG. 35

(BD014470)

A: FB10-8 B: FB15-8 C: FB18-8

Item No.	Part No.	Mark	Description	Req'd	Remarks : serial No.
A1	577H6-80201		FRONT TIRE ASSY	4	INC.1-4 TJW
-	577H6-80211		FRONT TIRE ASSY	4	INC.1-4 TW
A2	06002-45012		TIRE ASSY	4	INC.1-3 TJW
-	06001-45012		TIRE ASSY	4	INC.1-3 TW
1	06002-45012		TIRE,4.5-12	4	
-	06001-45012		TIRE,4.5-13	4	
2	06711-45012		TUBE	4	
3	06701-45012		FLAP	4	
4	52197-42001		RIM	4	
5	06731-00070		TUBE,EXTENSION	2	

FIG. 36 REAR WHEEL
(BD014480) リヤーホイール

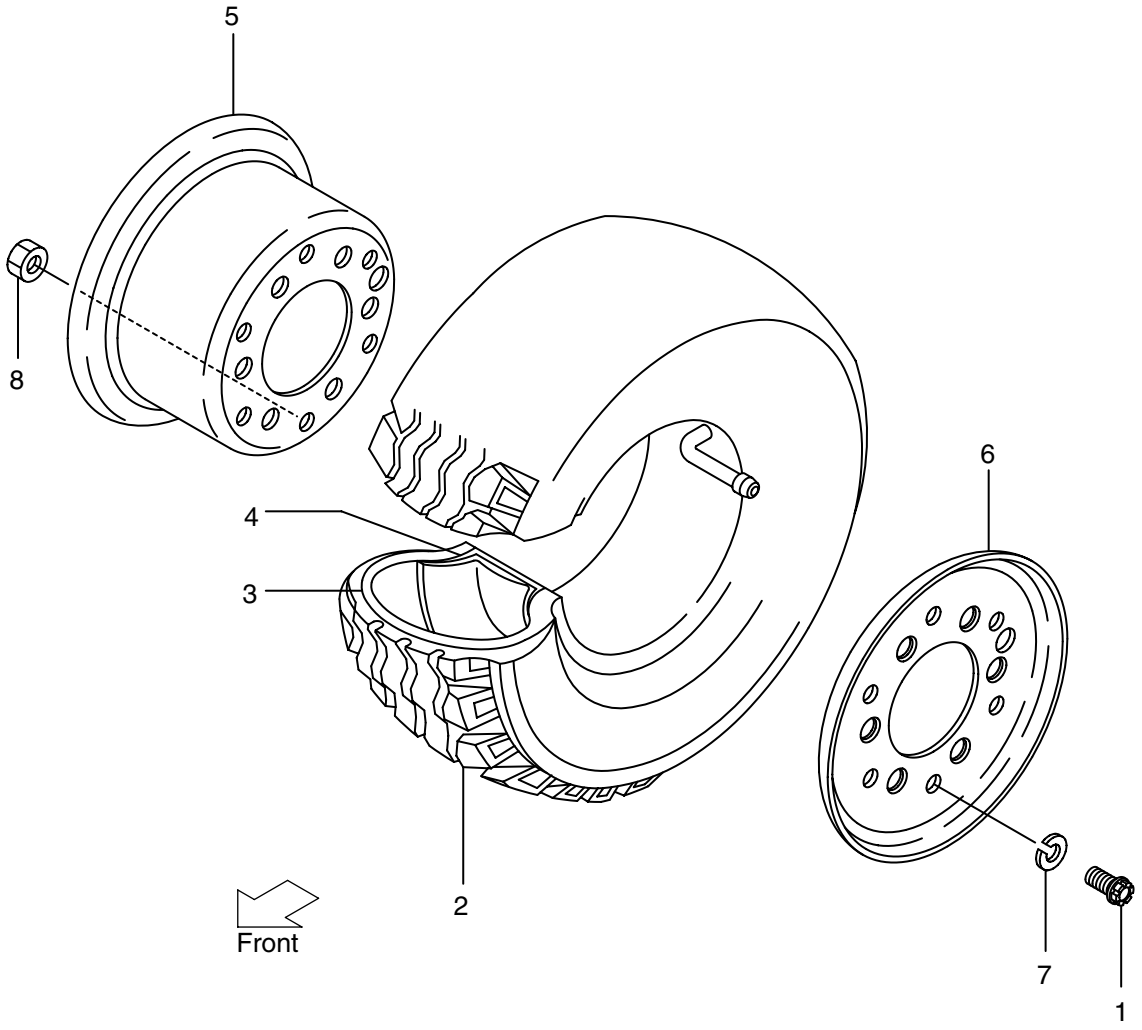

FIG. 36

(BD014480)

A: FB10-8 B: FB15-8 C: FB18-8

Item No.	Part No.	Mark	Description	Req'd	Remarks : serial No.
A1	280B4-40202		WHEEL ASSY	2	INC.1-8
-	280B4-40202		WHEEL ASSY	2	INC.1-8
					TRR
1	57393-82201		BOLT	12	
-	57393-82201		BOLT	12	TRR
A2	280B4-40211		TIRE ASSY	2	INC.2-4
-	280B4-40211		TIRE ASSY	2	INC.2-4
					TRR
2	280B4-42101		TIRE,16X6-8-10	2	
-	280B4-42101		TIRE,16X6-8-10	2	TRR
3	280B4-42111		TUBE	2	
-	280B4-42111		TUBE	2	TRR
4	280B4-42121		FLAP	2	
-	280B4-42121		FLAP	2	TRR
A3	27414-40321		RIM ASSY	2	INC.5,6
-	27414-40321		RIM ASSY	2	INC.5,6
					TRR
5	NO PART NO.	#	RIM,INSIDE	2	
-	NO PART NO.	#	RIM,INSIDE	2	TRR
6	NO PART NO.	#	RIM,OUTSIDE	2	
-	NO PART NO.	#	RIM,OUTSIDE	2	TRR
7	02011-00014		WASHER	12	
-	02011-00014		WASHER	12	TRR
8	01400-10014		NUT	12	
-	01400-10014		NUT	12	TRR

FIG. 37 REAR WHEEL (UNIQUE) [TUCR,TUSR,TUWR,TUGR]
(BD014490) ﾘﾔｰﾎｲｰﾙ (ﾕﾆｰｸ)

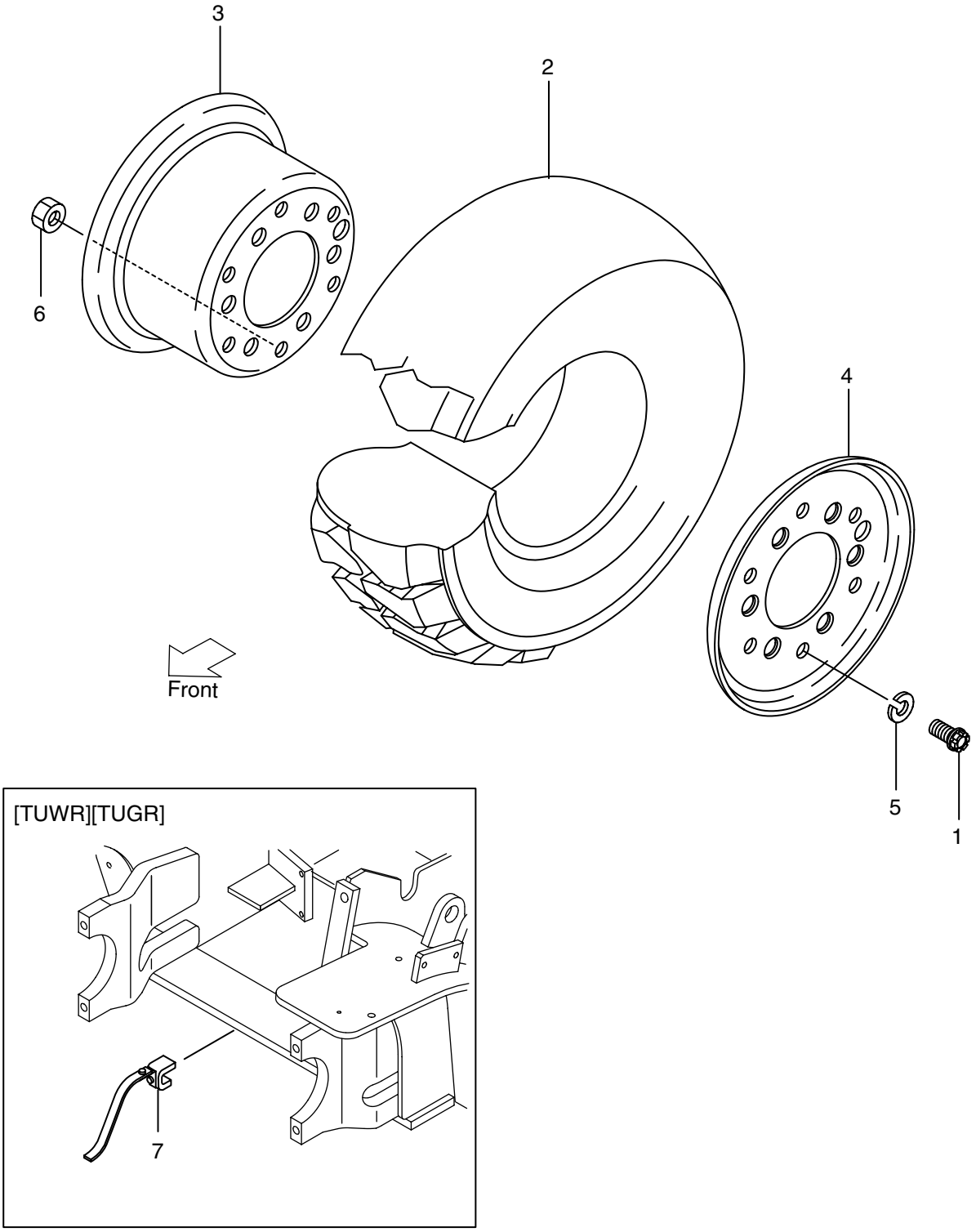

FIG. 37
(BD014490)

A: FB10-8 B: FB15-8 C: FB18-8

Item No.	Part No.	Mark	Description	Req'd	Remarks : serial No.
A1	580B6-80102		WHEEL ASSY	2	INC.1-6 TUCR AIC
-	580B6-80202		WHEEL ASSY	2	INC.1-6 TUCR DUN
-	580B6-80112		WHEEL ASSY	2	INC.1-6 TUSR AIC
-	580B6-80212		WHEEL ASSY	2	INC.1-6 TUSR DUN
-	580B6-80122		WHEEL ASSY	2	INC.1-6 TUWR AIC
-	580B6-80222		WHEEL ASSY	2	INC.1-6 TUWR DUN
-	580B6-80132		WHEEL ASSY	2	INC.1-6 TUGR AIC
-	580B6-80232		WHEEL ASSY	2	INC.1-6 TUGR DUN
1	57393-82201		BOLT	12	
2	580B6-82001		TIRE,16X6-8	2	TUCR AIC
-	580B6-82101		TIRE,16X6-8	2	TUCR DUN
-	580B6-82011		TIRE,16X6-8	2	TUSR AIC
-	580B6-82111		TIRE,16X6-8	2	TUSR DUN
-	580B6-82021		TIRE,16X6-8	2	TUWR AIC
-	580B6-82121		TIRE,16X6-8	2	TUWR DUN
-	580B6-82031		TIRE,16X6-8	2	TUGR AIC
-	580B6-82131		TIRE,16X6-8	2	TUGR DUN
A2	27414-40321		RIM ASSY	2	INC.3,4
3	NO PART NO.	#	RIM,INSIDE	2	
4	NO PART NO.	#	RIM,OUTSIDE	2	
5	02011-00014		WASHER	12	
6	01400-10014		NUT	12	
7	571A6-82081		BELT,EARTH	1	TUWR,TUGR

FIG. 38 FENDER [DD]

(BD014420) ﾌｪﾝﾀﾞ

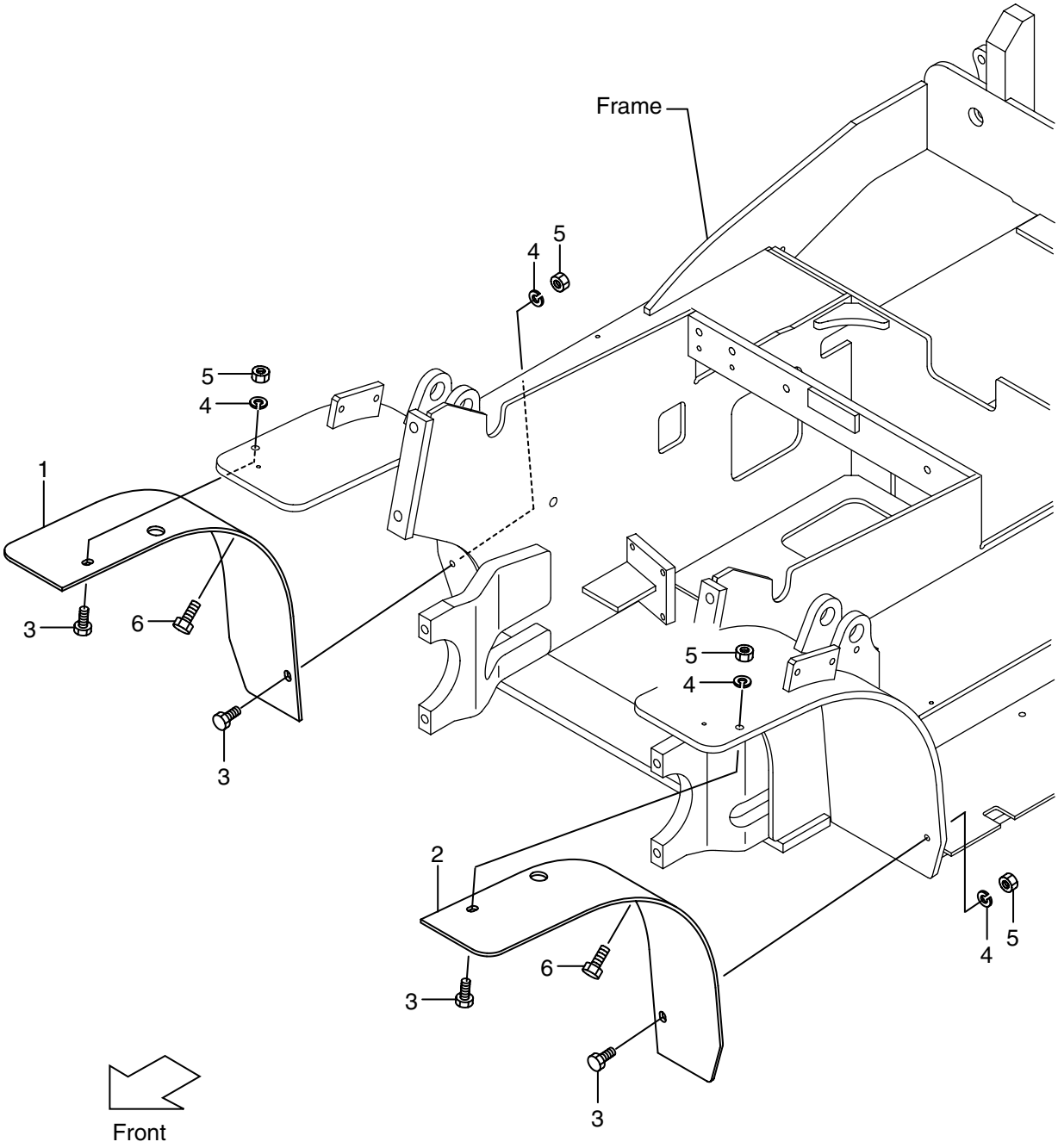

FIG. 38

(BD014420)

A: FB10-8 B: FB15-8 C: FB18-8

Item No.	Part No.	Mark	Description	Req'd	Remarks : serial No.
1	581E6-82011		FENDER,RH	1	
2	581E6-82021		FENDER,LH	1	
3	534A7-42231		BOLT	4	
4	02010-00010		WASHER	4	
5	234A8-42561		NUT	4	
6	216G6-43231		BOLT&WASHER	2	

FIG. 39 EPS ACTUATOR
(BD014510) EPS ｱｸﾁｭｴｰﾀ

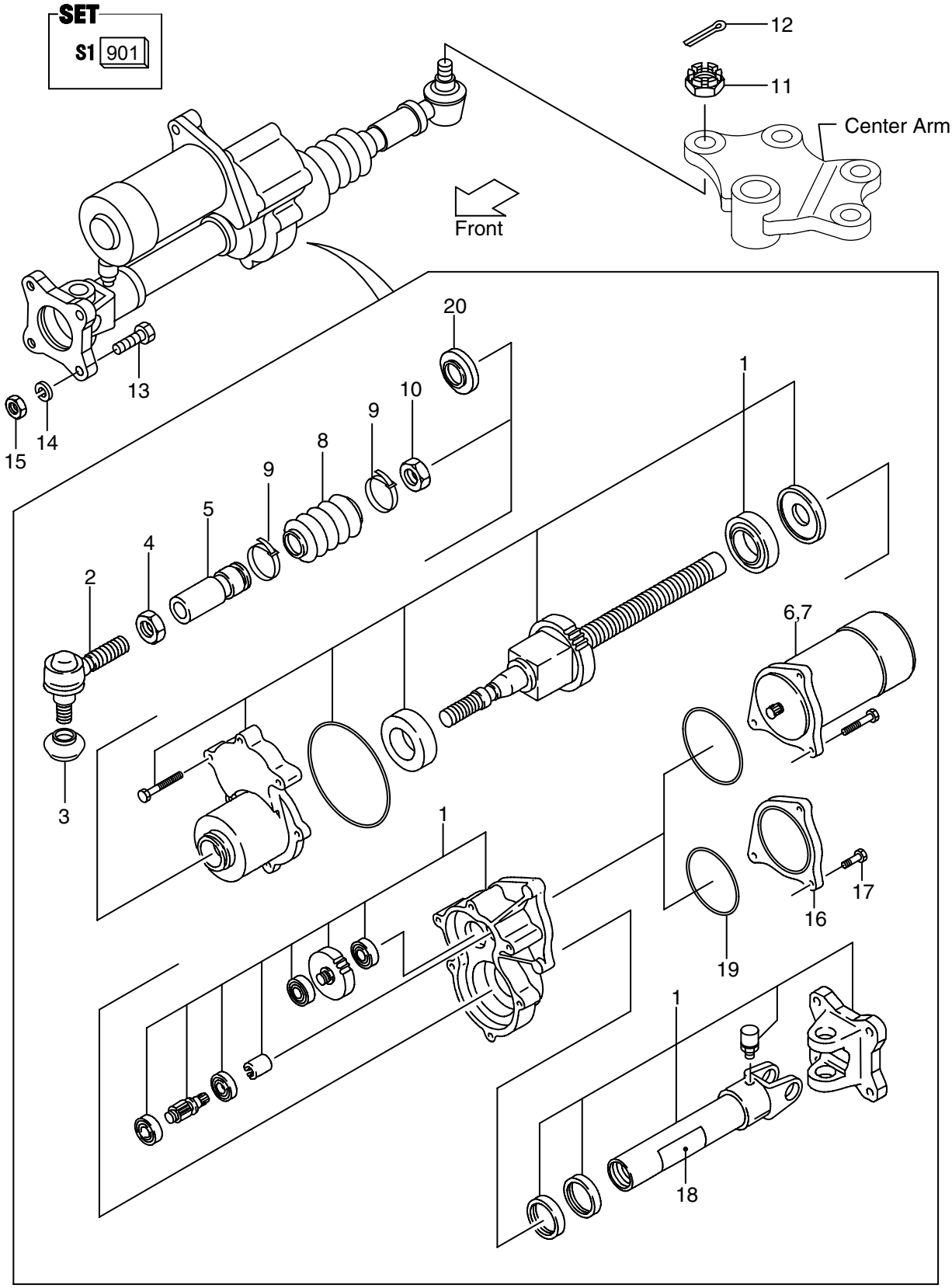

FIG. 39

(BD014510)

A: FB10-8 B: FB15-8 C: FB18-8

Item No.	Part No.	Mark	Description	Req'd	Remarks : serial No.
A1	27P14-50101		EPS ACTUATOR ASSY	1	INC.1-10,16-20
A2	27P14-50201		ACTUATOR ASSY	1	INC.1,6-8,16-20
A3	224W4-32341		BALL JOINT ASSY	1	INC.2,3
901	27P14-50301	S1	SET,ACTUATOR	1	INC.1,16-20
1	NO PART NO.	# *	ACTUATOR,SUB	1	
2	224W4-32351		SOCKET	1	
3	224W4-32171		COVER,DUST	1	
4	01407-00024		NUT	1	
5	27P14-52001		ROD,CONNECTING	1	
6	271A4-50501		MOTOR	1	INC.7
7	271A4-50701		BRUSH	2	
8	27P14-52201		BOOT	1	
9	27P14-52101		BAND	2	
10	01402-00022		NUT	1	
11	01412-10020		NUT,CASTLE	1	
12	02000-04040		PIN,COTTER	1	
13	01103-10040		BOLT	4	
14	02011-00010		WASHER	4	
15	01400-10010		NUT	4	
16	NO PART NO.	# *	COVER	1	
17	NO PART NO.	# *	BOLT	3	
18	NO PART NO.	# *	LABEL	1	
19	NO PART NO.	# *	O RING	1	
20	NO PART NO.	# *	COVER,DUST	1	

FIG. 40 OVERHEAD GUARD

(BD015110) オーバーヘッドガード

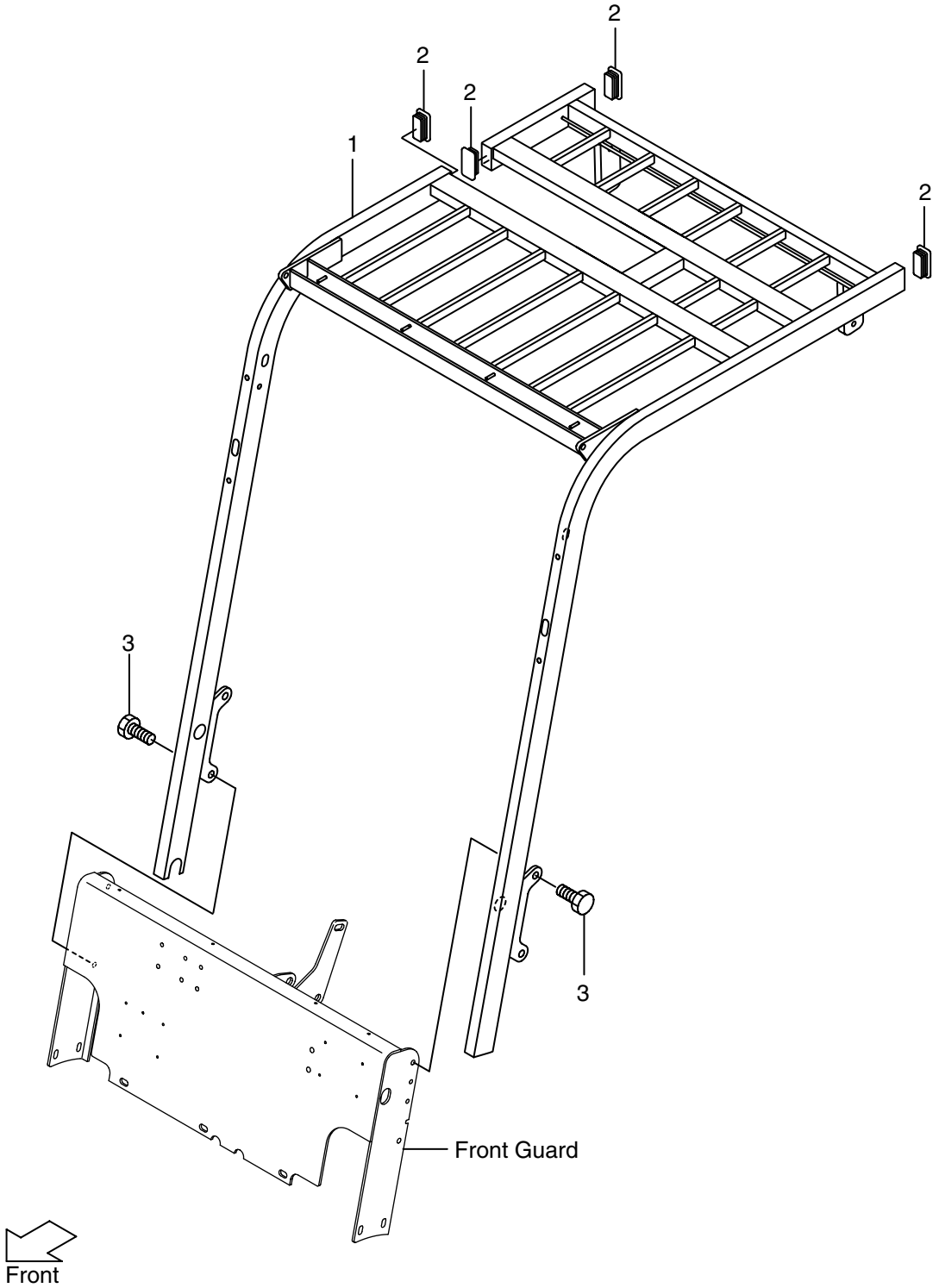

FIG. 40

(BD015110)

A: FB10-8 B: FB15-8 C: FB18-8

Item No.	Part No.	Mark	Description	Req'd	Remarks : serial No.
1	27P15-10351		GUARD,HEAD	1	A,B
-	27P25-10351		GUARD,HEAD	1	C
2	274R5-12501		CAP	4	
3	01186-12030		BOLT&WASHER	4	

FIG. 41 REAR PIPE
(BD015120) ﾘﾔ - ﾊﾟｲﾌﾟ

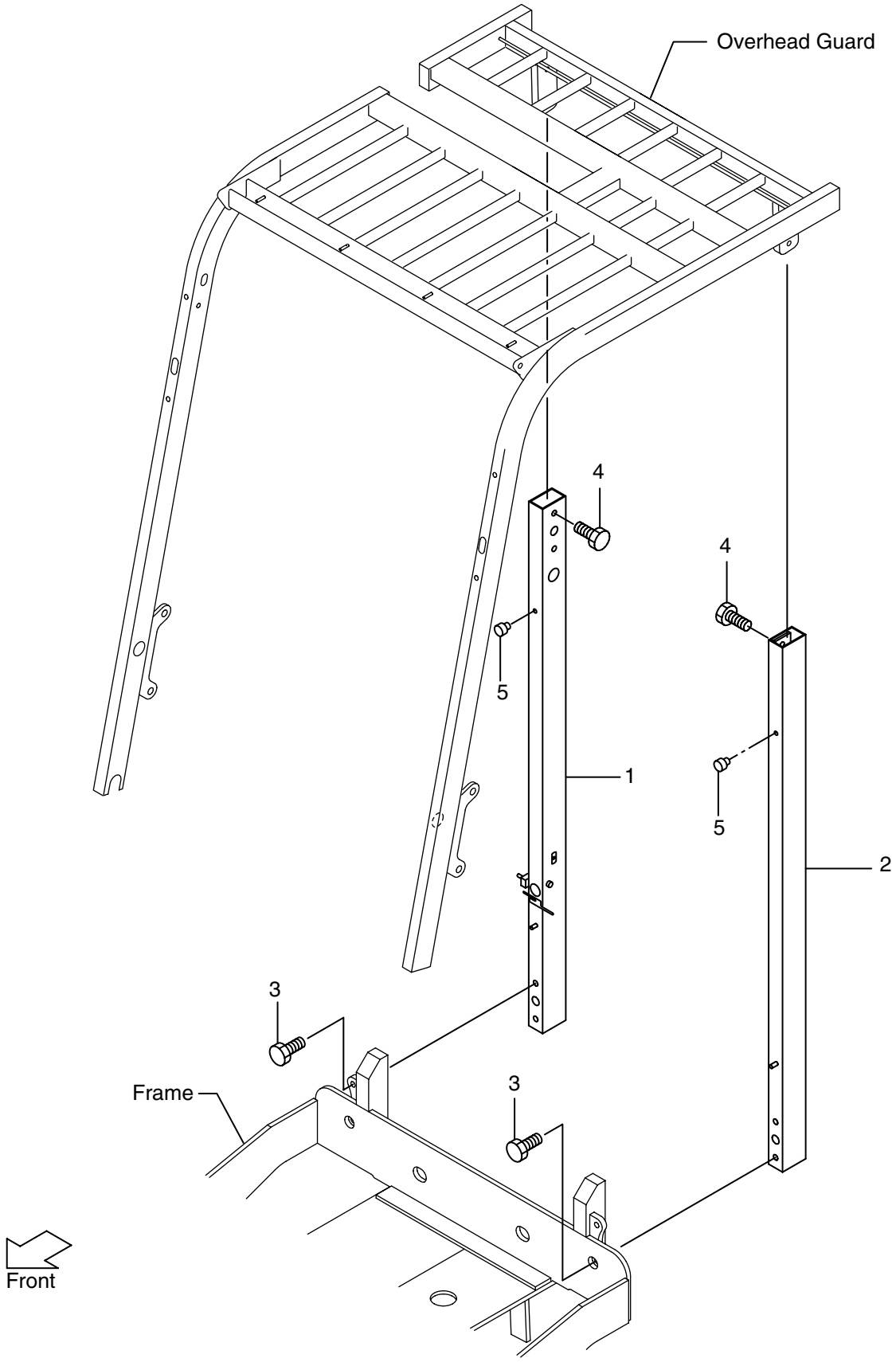

FIG. 41
(BD015120)

A: FB10-8 B: FB15-8 C: FB18-8

Item No.	Part No.	Mark	Description	Req'd	Remarks : serial No.
1	27P15-10311		PIPE,REAR,RH	1	
2	27P15-10321		PIPE,REAR,LH	1	
3	01184-12035		BOLT	4	
4	274R6-42451		BOLT	4	
5	571F5-12201		RUBBER,CUSHION	2	

FIG. 42 LAMP BRACKET
(BD015130) ﾗﾝﾌﾟﾌﾞﾗｹｯﾄ

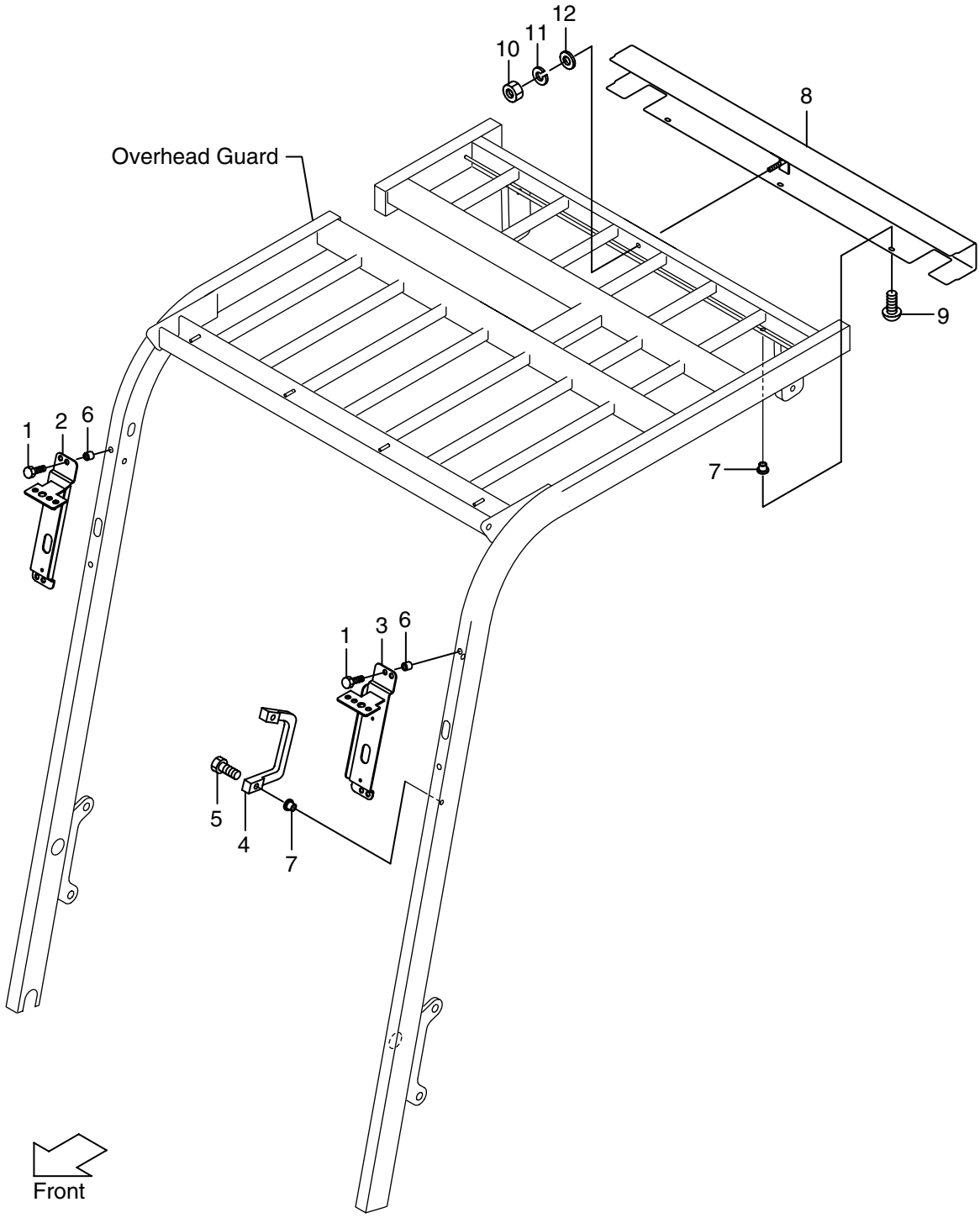

FIG. 42

(BD015130)

A: FB10-8 B: FB15-8 C: FB18-8

Item No.	Part No.	Mark	Description	Req'd	Remarks : serial No.
1	514A5-12021		BOLT&WASHER	4	
2	239A5-12501		BRACKET,HEAD LAMP,RH	1	
3	239A5-12521		BRACKET,HEAD LAMP,LH	1	
4	516G5-13051		GRIP	1	
5	01170-06025		SCREW	2	
6	514A5-12011		RIVET,POP	4	
7	516G5-13151		RIVET,POP	5	
8	27P15-12501		COVER	1	
9	01033-06016		SCREW&WASHER	3	
10	01400-00008		NUT	1	
11	02010-00008		WASHER	1	
12	02000-00008		WASHER	1	

FIG. 43 LAMP BRACKET [RRL, HLG]

(BD015140) ﾗﾝﾌﾟﾌﾞﾗｹｯﾄ

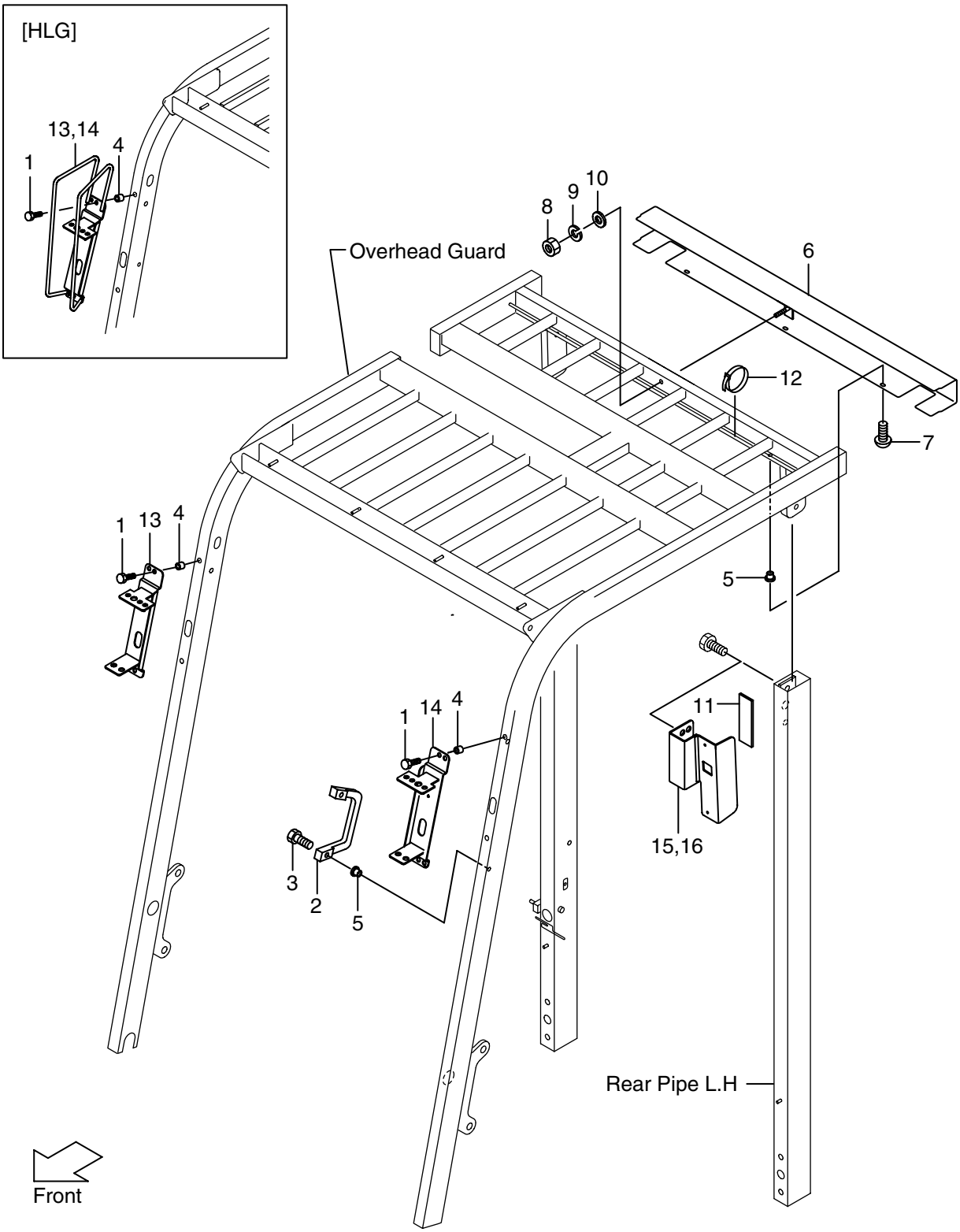

FIG. 43

(BD015140)

A: FB10-8 B: FB15-8 C: FB18-8

Item No.	Part No.	Mark	Description	Req'd	Remarks : serial No.
1	514A5-12021		BOLT&WASHER	4	
2	516G5-13051		GRIP	1	
3	01170-06025		SCREW	2	
4	514A5-12011		RIVET,POP	4	
5	516G5-13151		RIVET,POP	5	
6	57P19-92501		COVER	1	RRL
-	27P15-12501		COVER	1	HLG
7	01033-06016		SCREW&WASHER	3	
8	01400-00008		NUT	1	
9	02010-00008		WASHER	1	
10	02000-00008		WASHER	1	RRL
11	577T5-12311		RUBBER	2	RRL
12	04913-11200		BAND	2	RRL
13	543C9-92431		BRACKET,HEAD LAMP,RH	1	RRL
-	539A5-12041		BRACKET,HEAD LAMP,RH	1	HLG
14	543C9-92441		BRACKET,HEAD LAMP,LH	1	RRL
-	539A5-12011		BRACKET,HEAD LAMP,LH	1	HLG
15	581E9-92151		BRACKET,COMB.,RH	1	RRL
16	581E9-92201		BRACKET,COMB.,LH	1	RRL

FIG. 44 OVERHEAD GUARD PARTS

(BD015150) オーバーヘッドガードパーツ

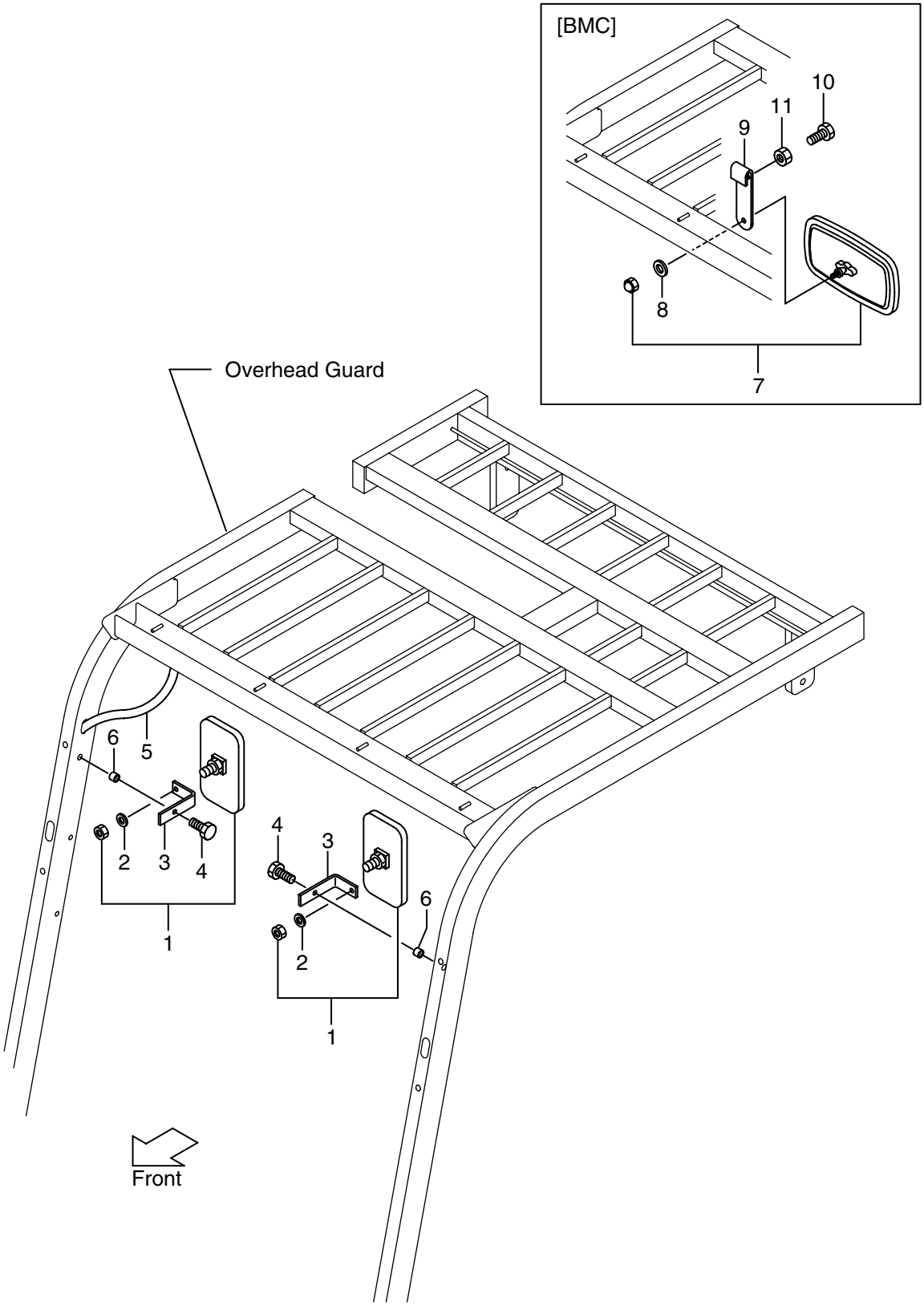

FIG. 44
(BD015150)

A: FB10-8 B: FB15-8 C: FB18-8

Item No.	Part No.	Mark	Description	Req'd	Remarks : serial No.
1	239A9-92001		MIRROR	2	
2	222A9-32011		WASHER	2	
3	534A5-12571		BRACKET	2	
4	514A5-12021		BOLT&WASHER	2	
5	516M5-12311		HOSE,VINYL	1	
-	577H5-13051		HOSE,VINYL	1	HGH150
6	514A5-12011		RIVET,POP	2	
7	239A9-92001		MIRROR	1	BMC
8	222A9-32011		WASHER	1	BMC
9	539A9-32001		BRACKET	1	BMC
10	01100-08025		BOLT	2	BMC
11	01402-00008		NUT	2	BMC

FIG. 45 ACCEL PEDAL
(BD015210) アクセルペダル

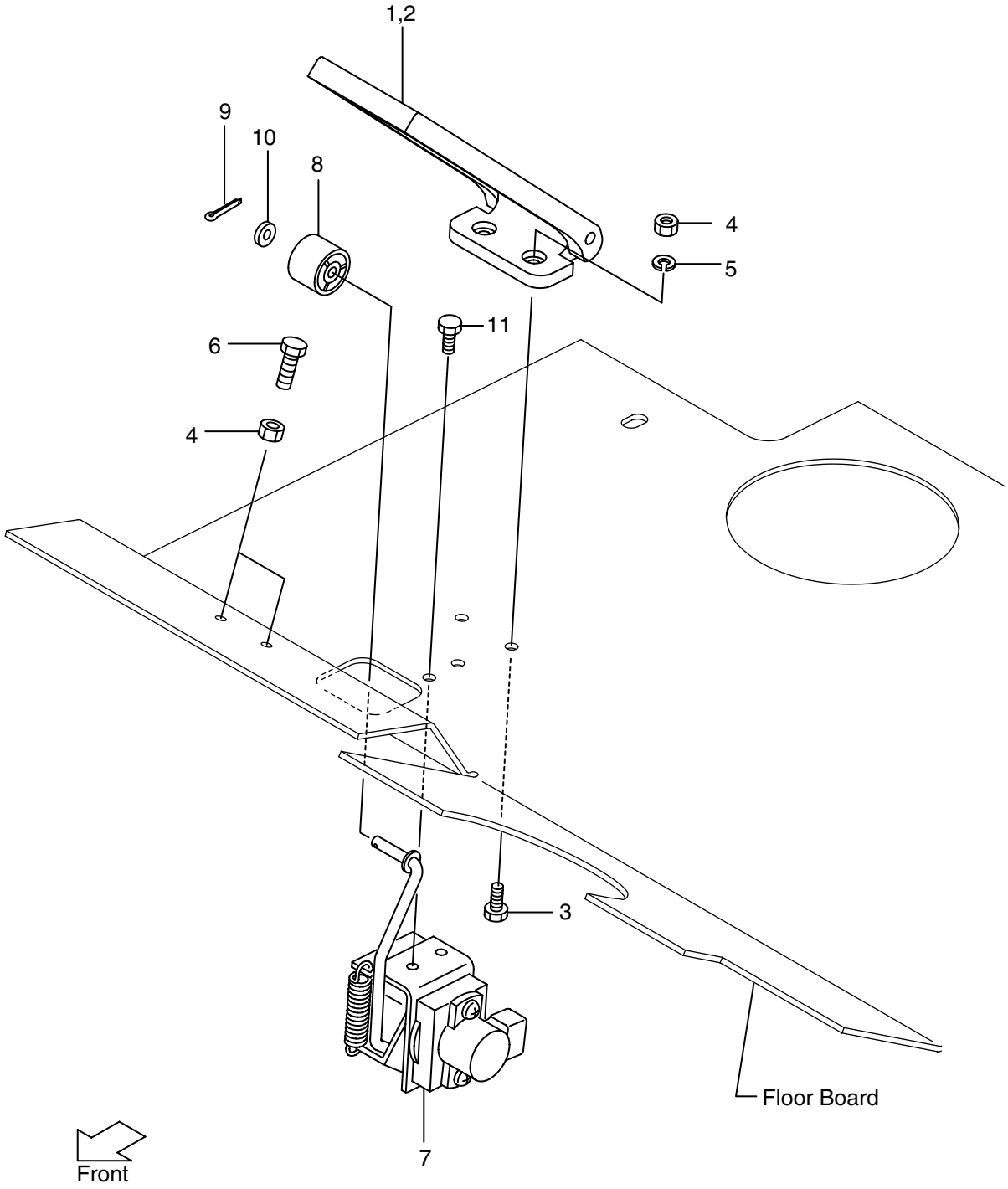

FIG. 45

(BD015210)

A: FB10-8 B: FB15-8 C: FB18-8

Item No.	Part No.	Mark	Description	Req'd	Remarks : serial No.
A	214A5-22051		ACELERATOR ASSY	1	INC.1,2
1	214A5-22181		PEDAL,ACCEL	1	
2	214A5-22191		BASE,ACCEL	1	
3	01100-06012		BOLT	2	
4	01400-00006		NUT	4	
5	02010-00006		WASHER	2	
6	01100-06020		BOLT	2	
7	27P15-20401		ACCELERATOR	1	
8	214A5-22001		ROLLER	1	
9	02200-02016		PIN,COTTER	1	
10	02000-00006		WASHER	1	
11	01183-06016		BOLT	2	

FIG. 46 BRAKE PEDAL
(BD015410) ﾌﾞﾚｰｷﾍﾟﾀﾞﾙ

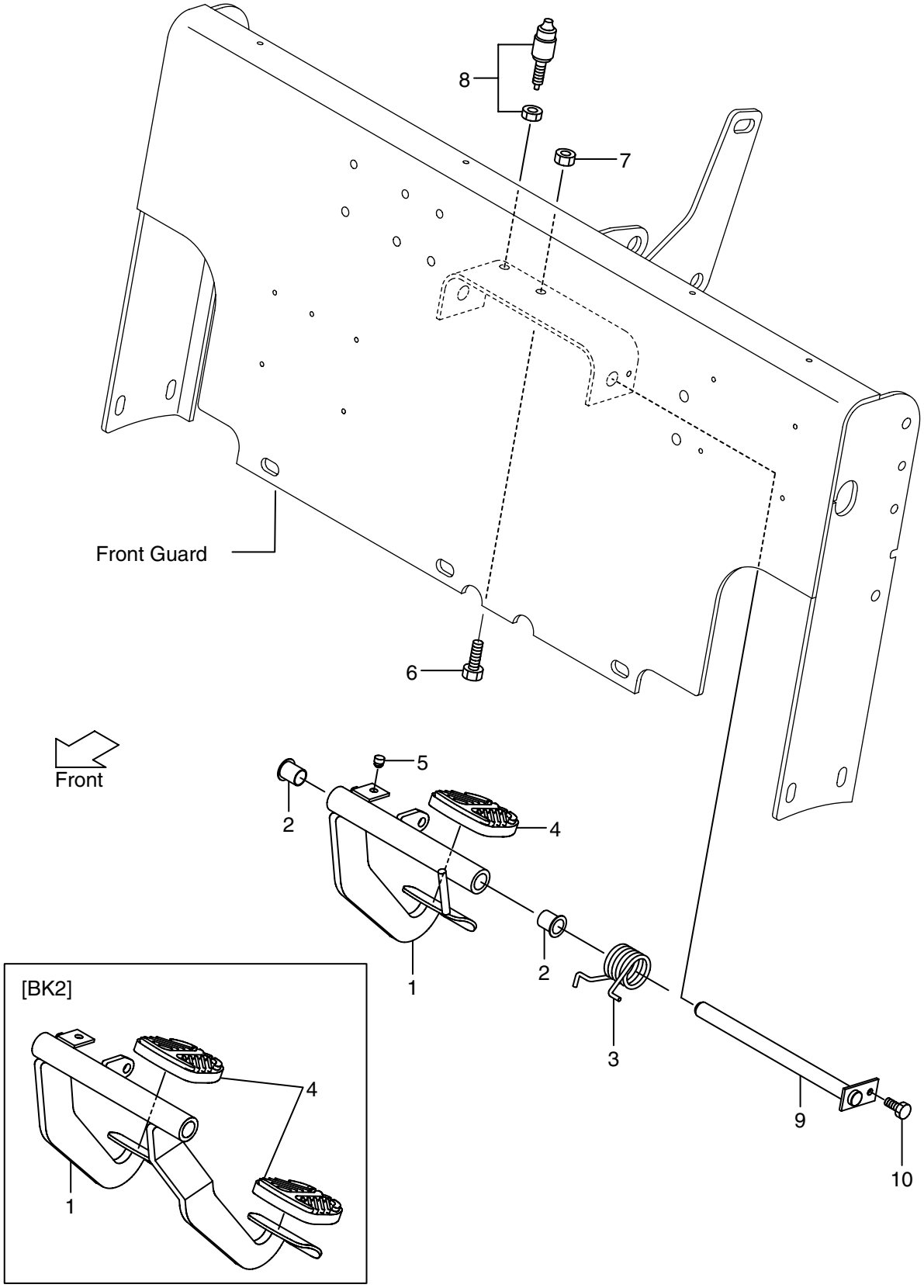

FIG. 46

(BD015410)

A: FB10-8 B: FB15-8 C: FB18-8

Item No.	Part No.	Mark	Description	Req'd	Remarks : serial No.
A1	281E5-40002		BRAKE PEDAL ASSY	1	INC.1,2
-	581E6-60002		BRAKE PEDAL ASSY	1	INC.1,2
					BK2
1	NO PART NO.	#	PEDAL,BRAKE	1	
-	NO PART NO.	#	PEDAL,BRAKE	1	BK2
2	239B5-42221		BUSHING	2	
3	281E5-42071		SPRING	1	
4	239A5-42301		COVER	1	
-	239A5-42301		COVER	2	BK2
5	23235-40091		RUBBER	1	
6	01120-10030		BOLT	1	
7	01402-00010		NUT	1	
8	27262-42101		SWITCH,STOP LAMP	1	
9	281E5-42151		SHAFT	1	
-	581E3-72302		SHAFT	1	FC,CS35,FCS35,FCS45
10	01185-06012		BOLT	1	

FIG. 47 BRAKE MASTER CYLINDER
(BD015420) ﾌﾞﾚｰｷﾏｽﾀｼﾘﾝﾀﾞ

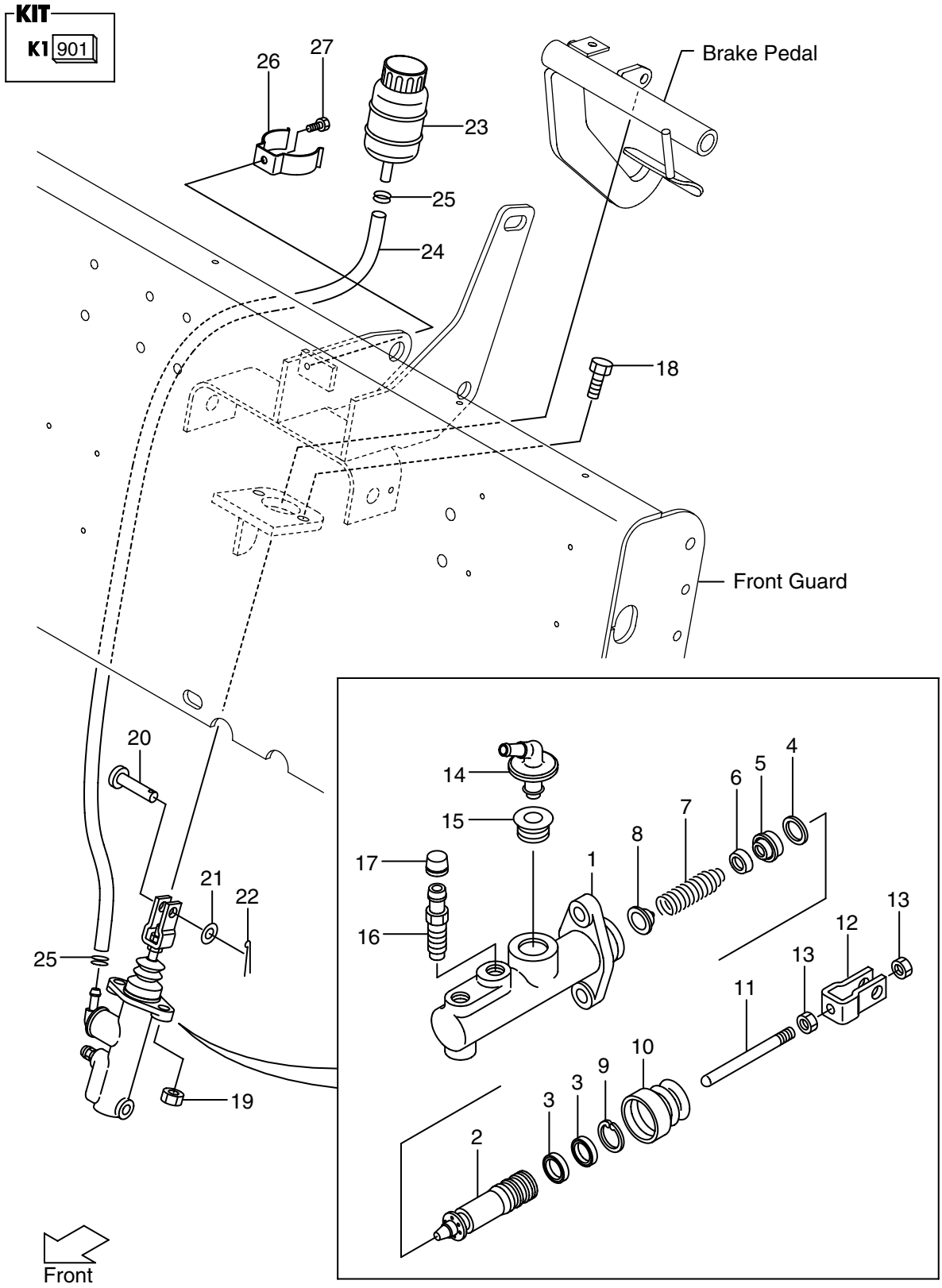

FIG. 47

(BD015420)

A: FB10-8 B: FB15-8 C: FB18-8

Item No.	Part No.	Mark	Description	Req'd	Remarks : serial No.
A	281E5-42101		MASTER CYLINDER ASSY	1	INC.1-17
901	239A5-40642	K1	KIT,REPAIR	1	INC.2-10
1	NO PART NO.	#	BODY,CYLINDER	1	
2	239A5-42161	*	PISTON	1	
3	239A5-42121	*	CUP,SECONDARY	2	
4	239A5-42101	*	SPACER	1	
5	239A5-42181	*	CUP,PRIMARY	1	
6	239A5-42191	*	THIMBLE	1	
7	239A5-42251	*	SPRING	1	
8	25595-42382	*	VALVE	1	
9	25595-42311	*	RING,SNAP	1	
10	239A5-42221	*	BOOT	1	
11	239A5-42271		ROD,PUSH	1	
12	239A5-42281		YOKE	1	
13	239A5-42291		NUT	2	
14	25595-42411		UNION,FILLER	1	
15	25595-42421		BUSHING	1	
16	239A5-42311		VALVE,BLEEDER	1	
17	239A5-42321		CAP,BLEEDER	1	
18	01184-10030		BOLT&WASHER	2	
19	01400-00010		NUT	2	
20	02262-10030		PIN,CLEVIS	1	
21	02000-00010		WASHER	1	
22	02200-25020		PIN,COTTER	1	
23	23775-42101		TANK,RESERVE	1	
24	23255-42101		HOSE	1	
25	25595-42491		CLIP	2	
26	224G5-42061		CLIP	1	
27	01185-06012		BOLT	1	

FIG. 48 BRAKE PIPE
(BD015430) ﾌﾞﾚｰｷﾊﾟｲﾌﾟ

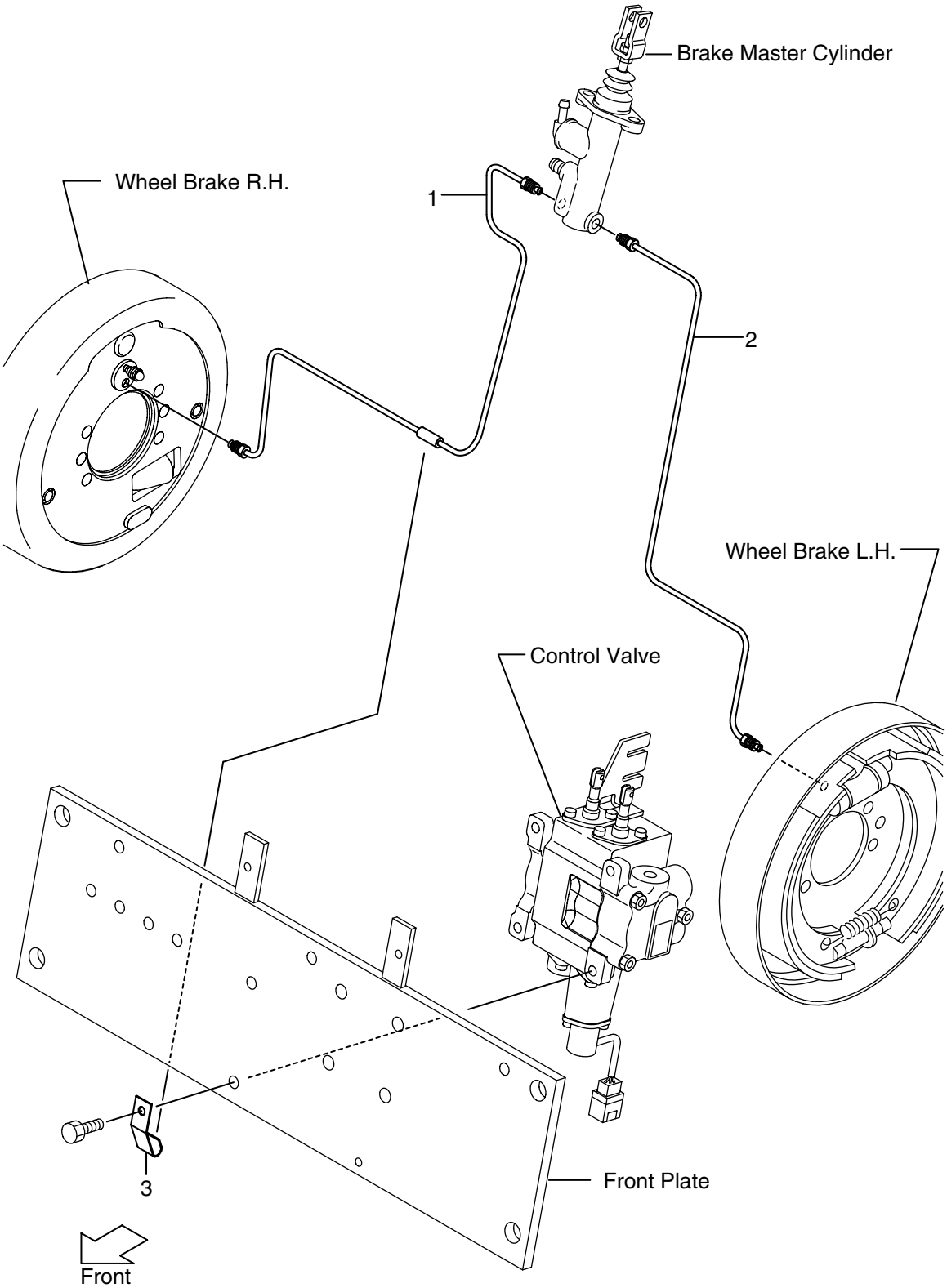

FIG. 48
(BD015430)

A: FB10-8 B: FB15-8 C: FB18-8

Item No.	Part No.	Mark	Description	Req'd	Remarks : serial No.
1	281E5-42201		PIPE,BRAKE,RH	1	
2	281E5-42221		PIPE,BRAKE,LH	1	
3	24235-42211		CLIP	1	

FIG. 49 PARKING BRAKE LEVER

(BD015510) ﾊﾟｰｷﾝｸﾞﾌﾞﾚｰｷﾚﾊﾞｰ

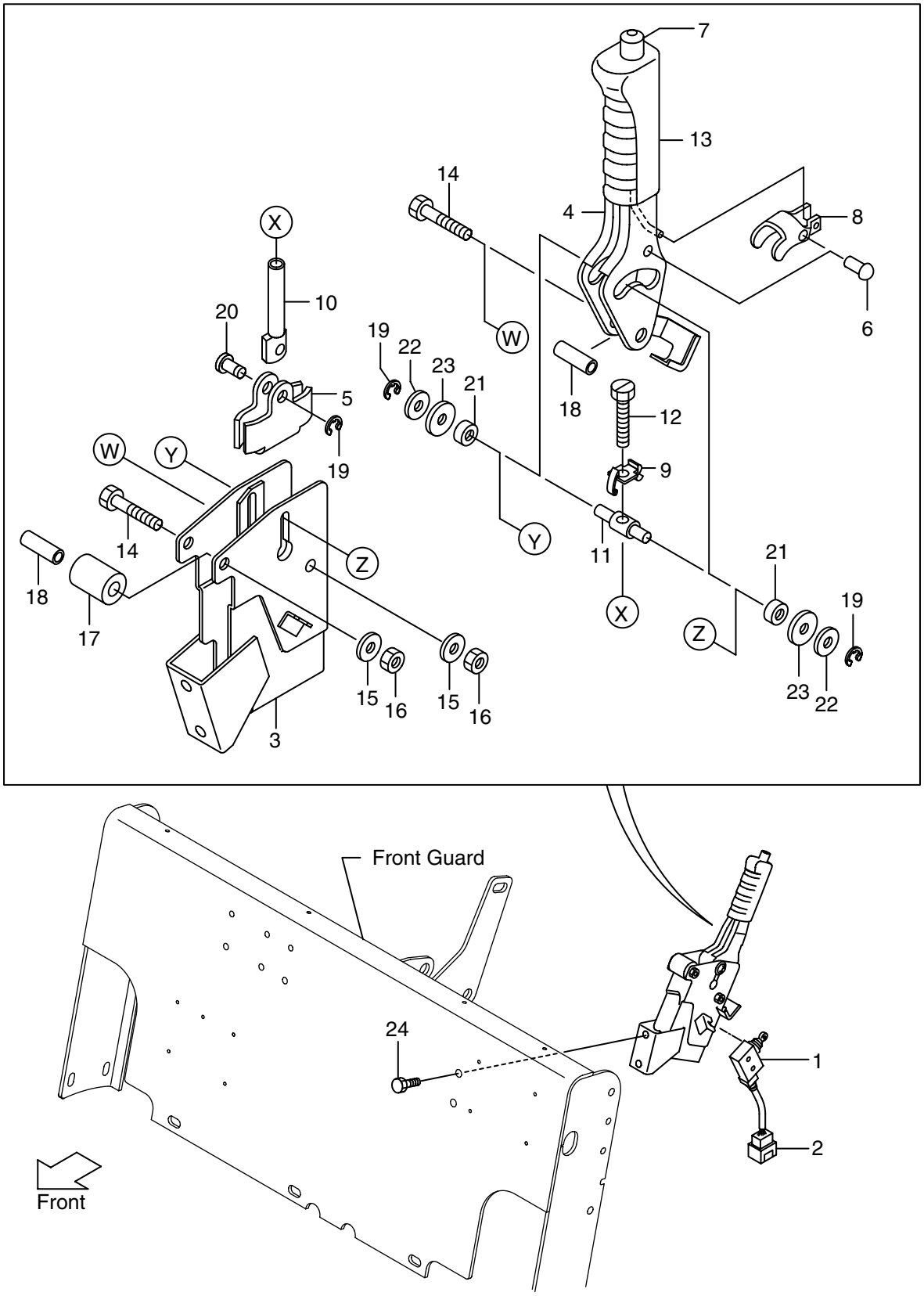

FIG. 49

(BD015510)

A: FB10-8 B: FB15-8 C: FB18-8

Item No.	Part No.	Mark	Description	Req'd	Remarks : serial No.
1	27912-62441		SWITCH,MICRO	1	
2	278M2-42061		WIRE HARNESS,SWITCH	1	
A	239A5-50101		PARKING BRAKE ASSY	1	INC.3-23
3	NO PART NO.	#	BRACKET	1	
4	NO PART NO.	#	LEVER	1	
5	27415-52151		BRACKET	1	
6	230C5-55021		PIN	1	
7	230C5-55031		ROD,RELEASE	1	
8	230C5-55041		PLATE,LOCK	1	
9	230C5-55051		PLATE,TENSION	1	
10	230C5-55061		ROD,ADJUST	1	
11	230C5-55071		PIN,TRUNION	1	
12	230C5-55081		BOLT	1	
13	NO PART NO.	#	GRIP	1	
14	01100-08050		BOLT	2	
15	02010-00008		WASHER	2	
16	01400-00008		NUT	2	
17	222A5-52111		RUBBER,STOPPER	1	
18	230C5-55101		COLLAR	2	
19	214A5-52131		E RING	3	
20	230C5-55111		PIN	1	
21	230C5-55121		ROLLER,CAM	1	
22	214A5-52121		WASHER	2	
23	214A5-52241		WASHER	2	
24	216G6-43231		BOLT&WASHER	2	

FIG. 50 FRAME
(BD016110) フレーム

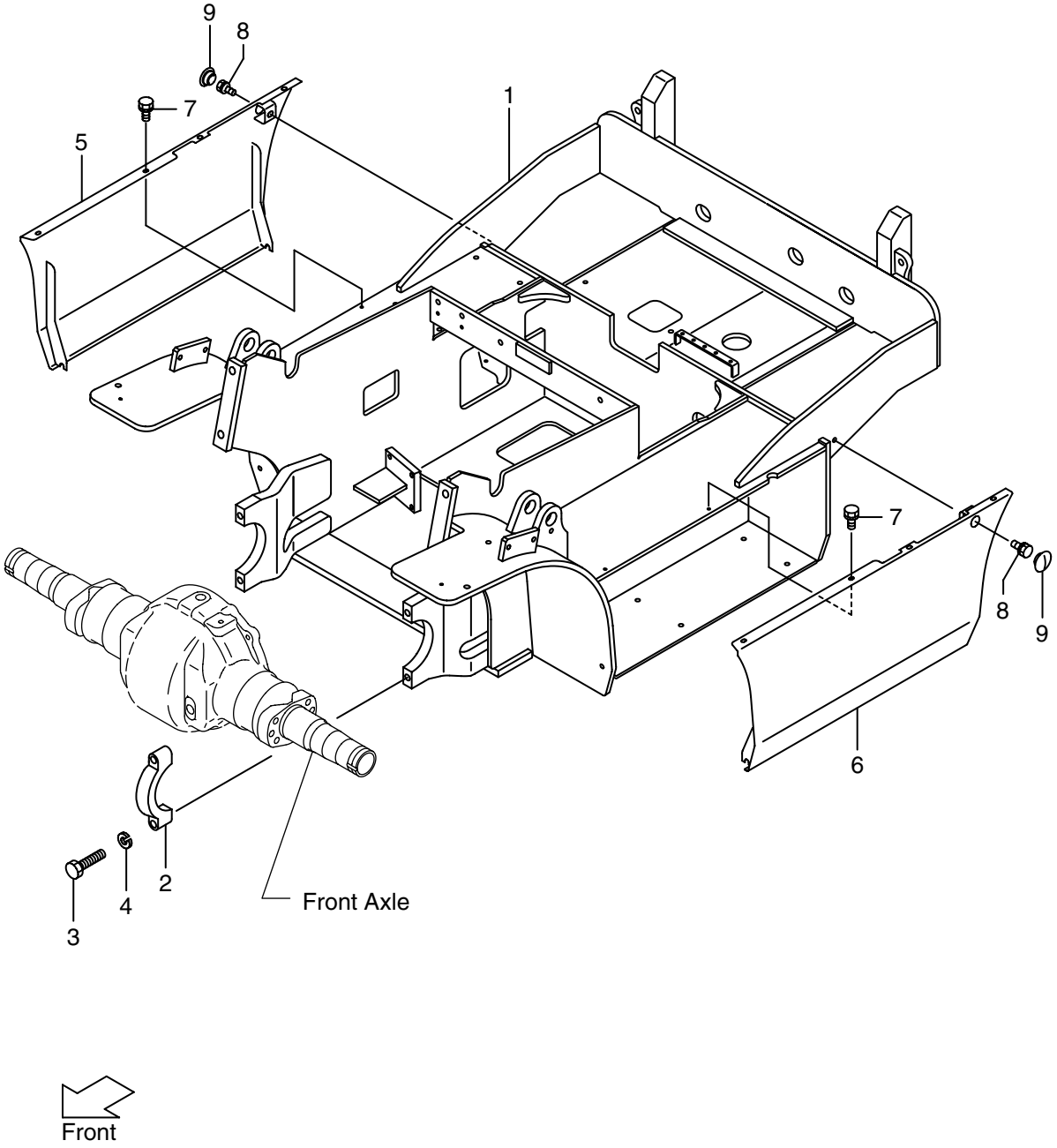

FIG. 50
(BD016110)

A: FB10-8 B: FB15-8 C: FB18-8

Item No.	Part No.	Mark	Description	Req'd	Remarks : serial No.
1	NO PART NO.	#	FRAME	1	
2	210F6-12441		CAP	2	
3	01100-14070		BOLT	4	
4	02010-00014		WASHER	4	
5	281E6-10801		COVER,SIDE,RH	1	
6	281E6-10811		COVER,SIDE,LH	1	
7	214A2-42621		SCREW	4	
8	01186-10020		BOLT	2	
9	277H6-12641		CAP,HOLE	2	

FIG. 51 BALANCE WEIGHT

(BD016310) ﾊﾞﾗﾝｽｳｪｲﾄ

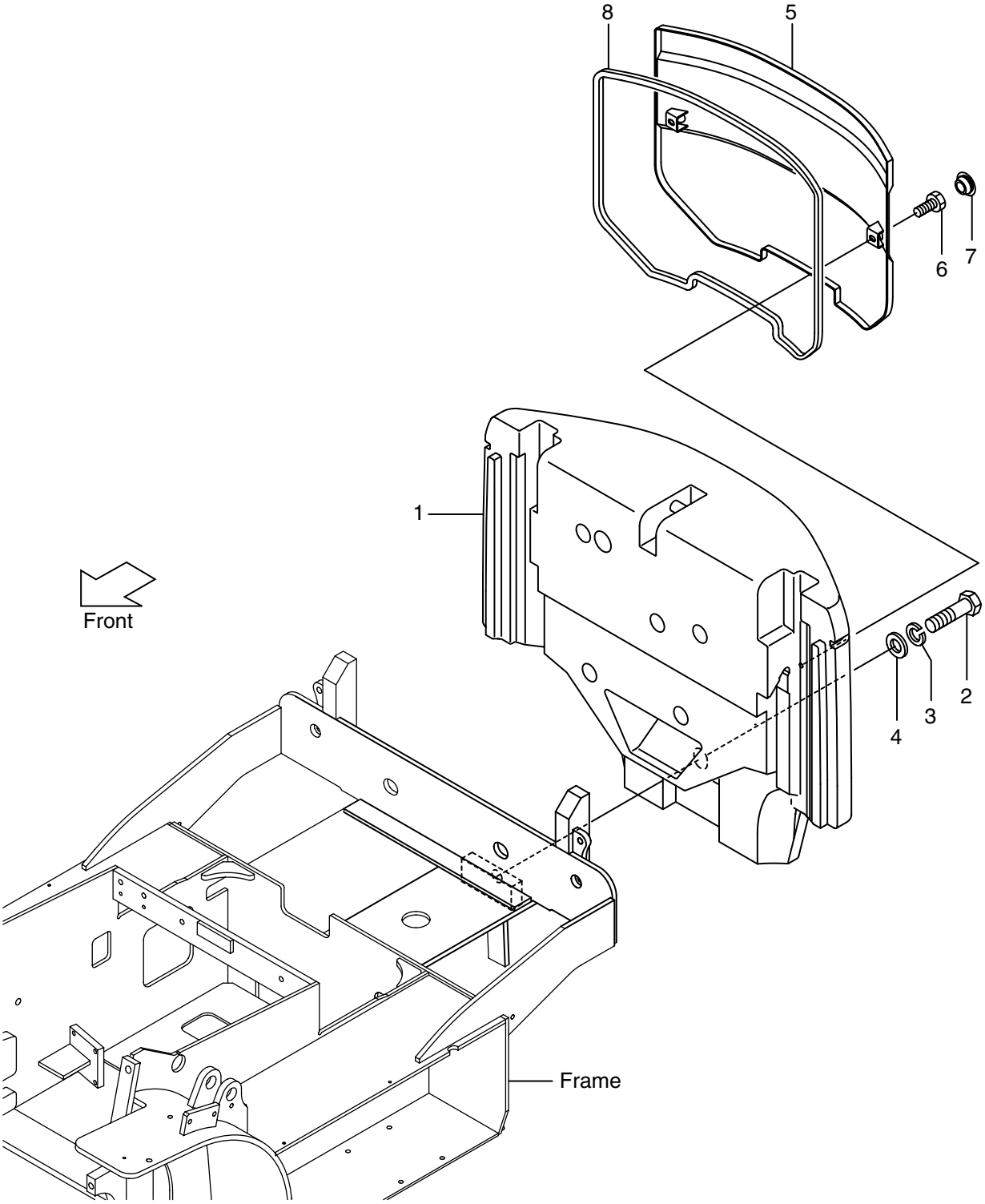

FIG. 51
(BD016310)

A: FB10-8 B: FB15-8 C: FB18-8

Item No.	Part No.	Mark	Description	Req'd	Remarks : serial No.
1	NO PART NO.	#	WEIGHT,BALANCE	1	
2	01110-30110		BOLT	1	
3	02010-00030		WASHER	1	
4	22216-30051		WASHER	1	
5	281E6-30201		COVER,REAR	1	
6	01185-10020		BOLT&WASHER	2	
7	277H6-12641		CAP	2	
8	277H6-32101		FOAM,RUBBER	1	

FIG. 52 FRONT GUARD
(BD016410) ﾌﾛﾝﾄｶﾞｰﾄﾞ

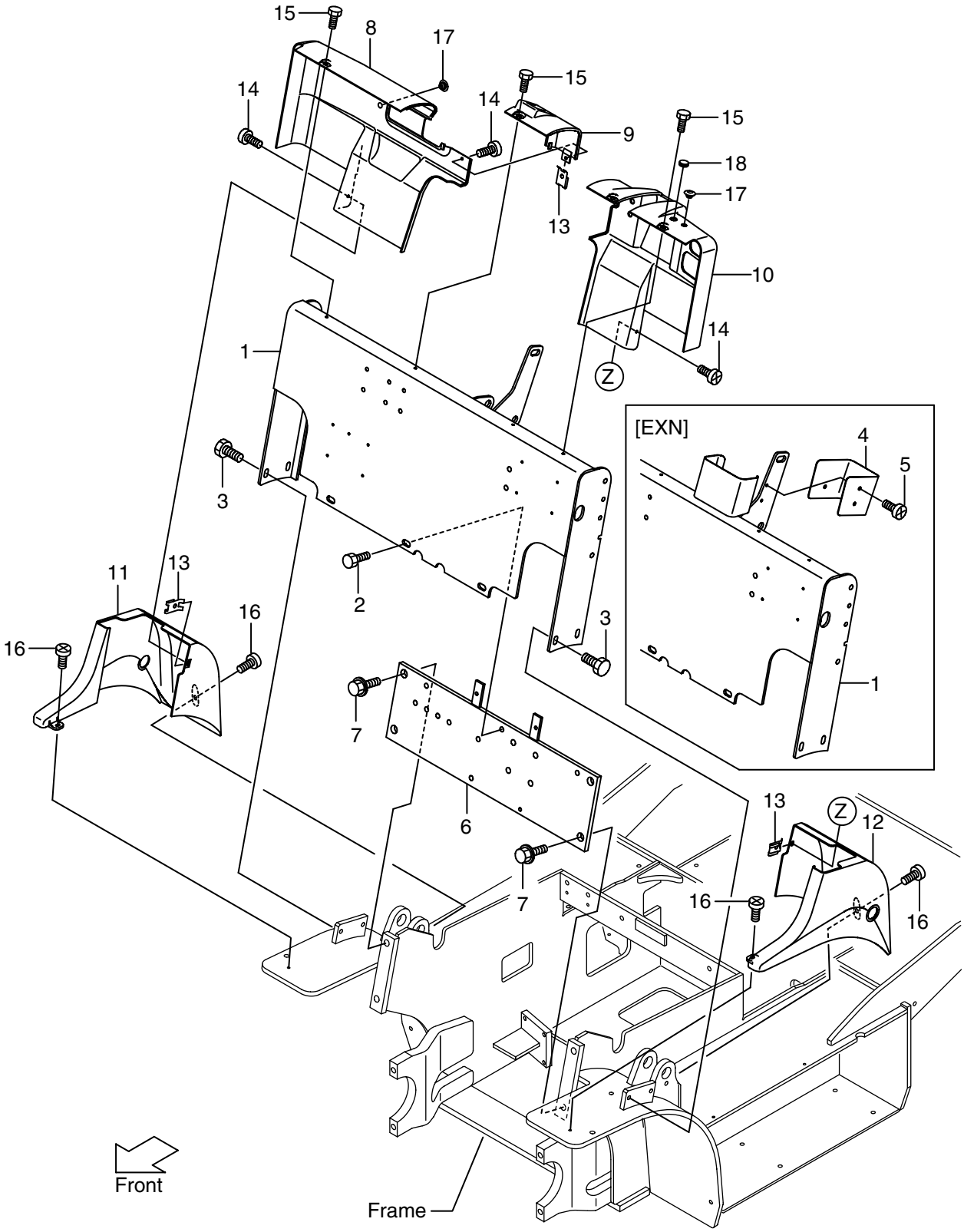

FIG. 52

(BD016410)

A: FB10-8 B: FB15-8 C: FB18-8

Item No.	Part No.	Mark	Description	Req'd	Remarks : serial No.
1	27P16-40301		GUARD,FRONT	1	
-	581E2-60202		GUARD,FRONT	1	EXN
2	513A5-12201		BOLT	3	
3	01186-10025		BOLT&WASHER	4	
4	581E2-62201		COVER,COLUMN	1	EXN
5	214A6-42252		SCREW	3	EXN
6	27P16-40351		PLATE,FRONT	1	
7	216G6-43561		BOLT	4	
8	281E6-42401		COVER, FRONT GUARD,RH	1	
-	281E6-42411		COVER, FRONT GUARD,RH	1	3SV
-	281E6-42421		COVER, FRONT GUARD,RH	1	4SV
-	281E6-42431		COVER, FRONT GUARD,RH	1	5SV
9	27P16-42441		COVER,RESERVE TANK	1	
10	281E6-42451		COVER, FRONT GUARD,LH	1	
11	281E6-42551		COVER, TILT CYLINDER,RH	1	
-	281E6-42701		COVER, TILT CYLINDER,RH	1	3SV,4SV,5SV
12	281E6-42561		COVER, TILT CYLINDER,LH	1	
-	281E6-42561		COVER, TILT CYLINDER,LH	1	3SV
-	281E6-42711		COVER, TILT CYLINDER,LH	1	4SV,5SV
13	281E6-42521		NUT,SPEED	3	
14	209K2-43001		SCREW	3	
15	52N55-32291		BOLT	4	
16	214A6-42252		SCREW	4	
17	281E6-42571		PLUG	2	
18	27792-63381		GROMET	1	

FIG. 53 BONNET
(BD016420) ボ゛ンネット

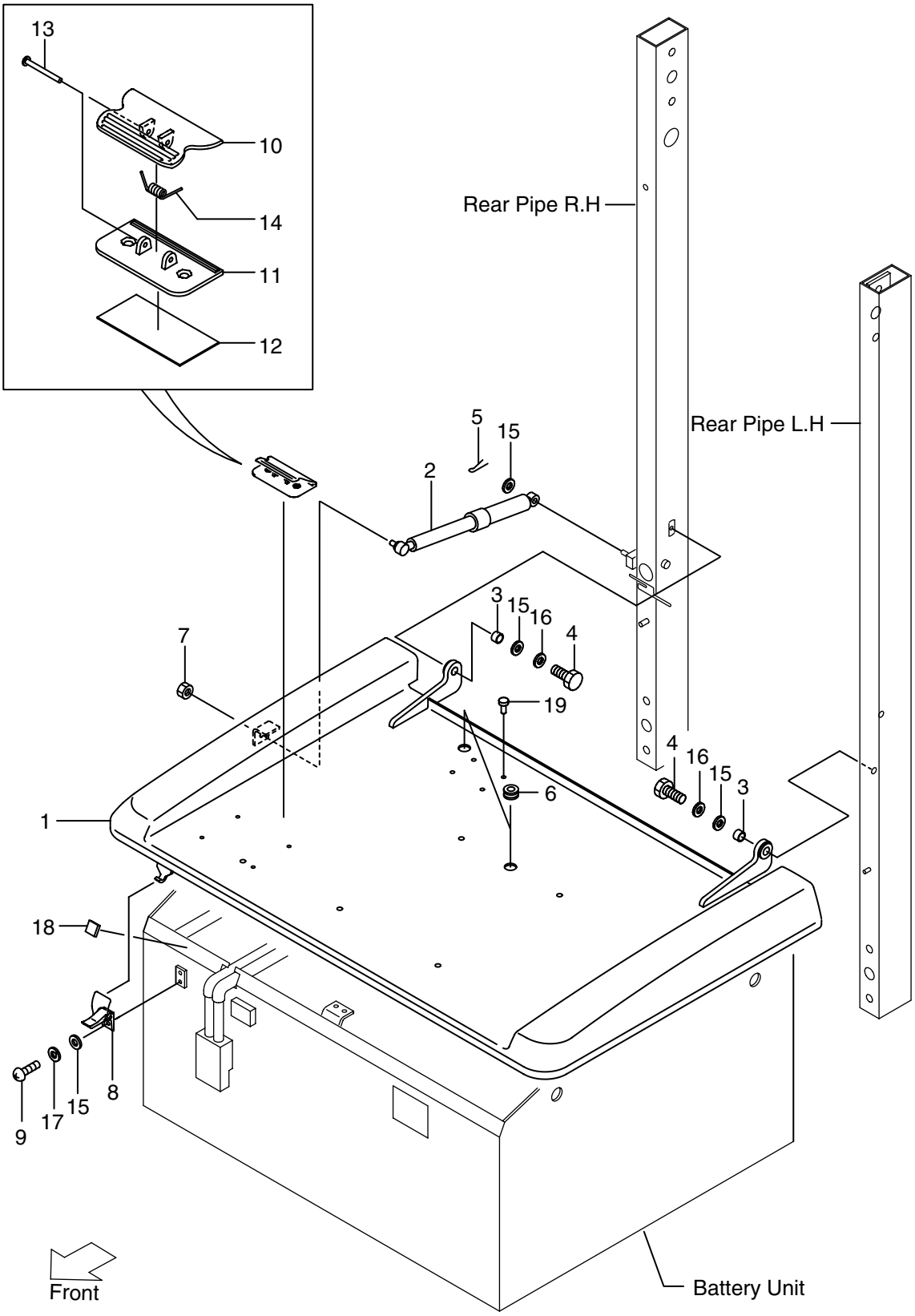

FIG. 53
(BD016420)

A: FB10-8 B: FB15-8 C: FB18-8

Item No.	Part No.	Mark	Description	Req'd	Remarks : serial No.
1	281E6-40102		BONNET	1	A,B
-	281H6-40101		BONNET	1	C
2	281E6-40502		SPRING,GAS	1	
3	256C5-62551		COLLAR	2	
4	01103-08028		BOLT	2	
5	02200-02020		PIN	1	
6	221A2-42031		GROMMET	2	
7	23652-12051		NUT	1	
8	27416-42761		CATCH,BONNET	1	
9	01030-08010		SCREW	2	
A	22N56-44101		BINDER ASSY	1	INC.10-14
10	22N56-44111		CLIP	1	
11	22N56-44121		BASE	1	
12	22N56-44131		TAPE	1	
13	22N56-44141		RIVET	1	
14	22N56-44151		SPRING	1	
15	02000-00008		WASHER	5	
16	02011-00008		WASHER	2	
17	02010-00008		WASHER	2	
18	281E6-42261		RUBBER,BONNET	1	
19	25596-42361		RIVET	4	

FIG. 54 BATTERY COVER
(BD016430) ﾊﾞｯﾃﾘｶﾊﾞｰ

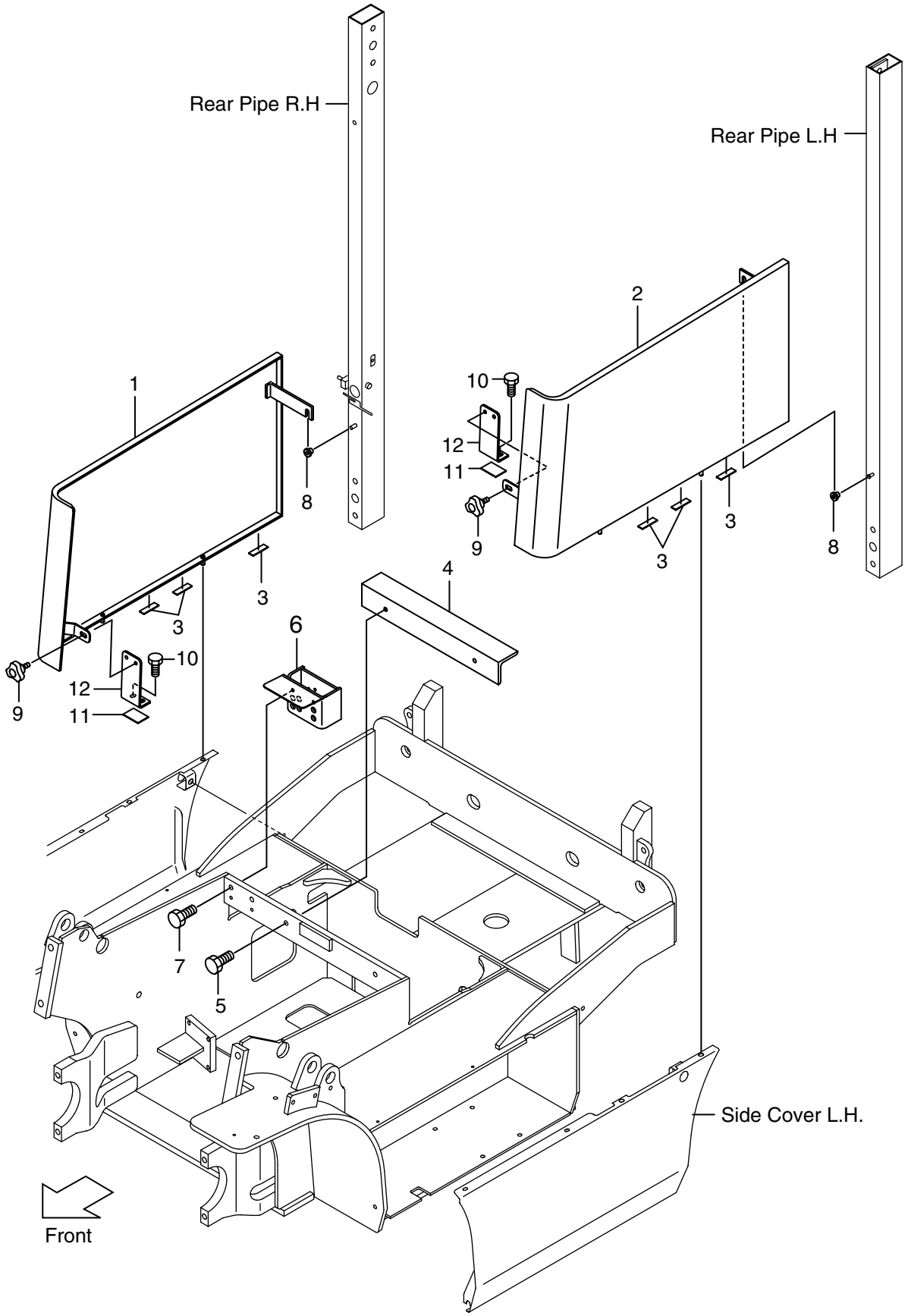

FIG. 54
(BD016430)

A: FB10-8 B: FB15-8 C: FB18-8

Item No.	Part No.	Mark	Description	Req'd	Remarks : serial No.
1	27P16-40201		COVER,BATTERY,RH	1	A,B
-	27P26-40201		COVER,BATTERY,RH	1	C
2	27P16-40211		COVER,BATTERY,LH	1	A,B
-	27P26-40211		COVER,BATTERY,LH	1	C
3	280B6-52011		RUBBER	6	
4	281E6-42751		ANGLE	1	A,B
5	01183-08025		BOLT	2	A,B
6	281E6-42661		BRACKET	1	A,B
-	281E6-42651		BRACKET	1	C
7	01184-10025		BOLT	2	A,B
-	01183-08020		BOLT	2	C
8	278M6-42651		CAP	2	
9	281E6-42901		BOLT,KNOB	2	
10	01183-08016		BOLT&WASHER	2	
11	281E6-42741		RUBBER	2	
12	281E6-42281		BRACKET	2	

FIG. 55 FLOOR BOARD
(BD016440) ﾌﾛｱﾎﾞｰﾄﾞ

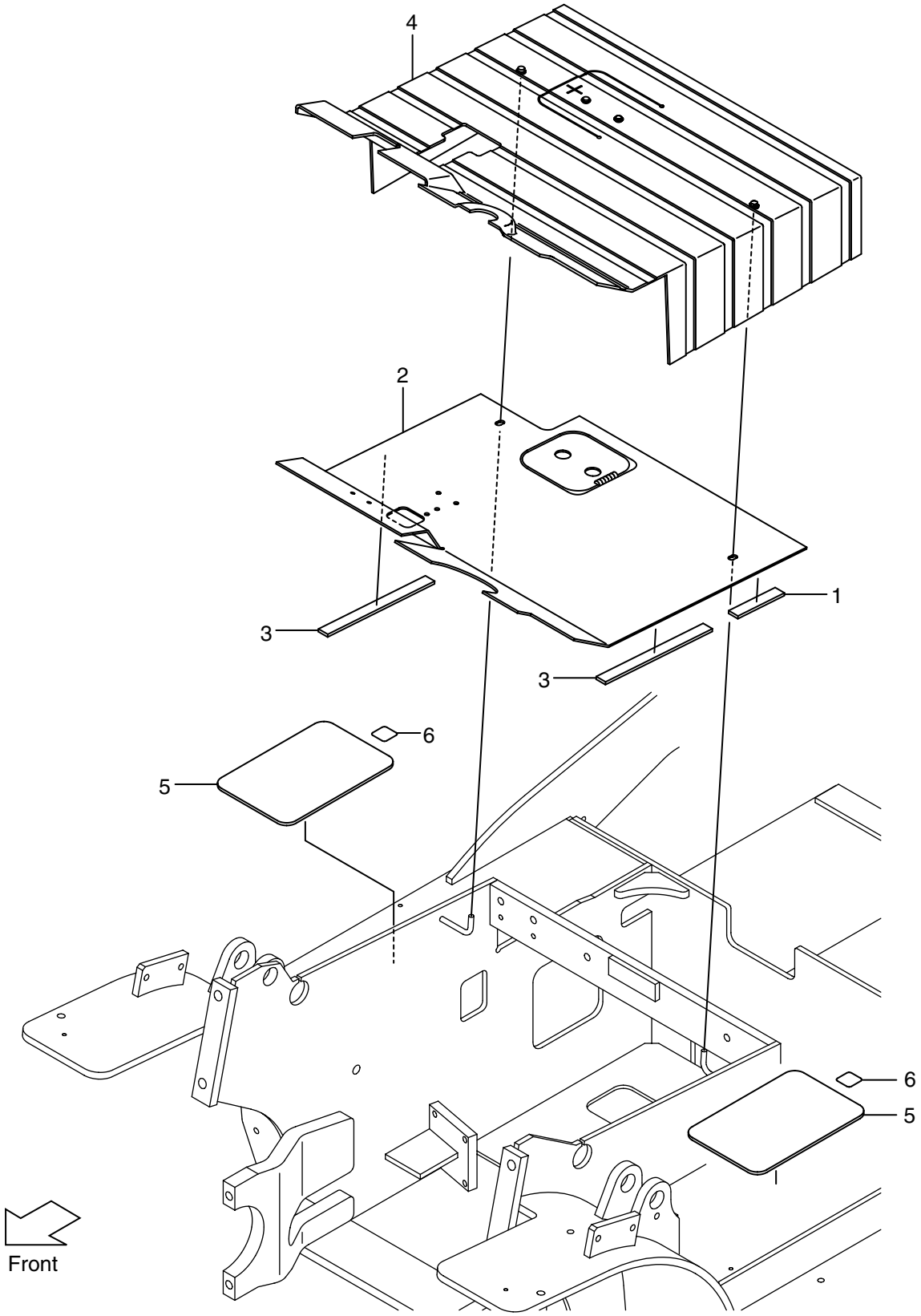

FIG. 55
(BD016440)

A: FB10-8 B: FB15-8 C: FB18-8

Item No.	Part No.	Mark	Description	Req'd	Remarks : serial No.
1	277H6-52081		RUBBER	1	
2	281E6-50102		BOARD,FLOOR	1	
3	234A6-43121		RUBBER	2	
4	281E6-52101		MAT,FLOOR	1	A,B
-	281E6-52111		MAT,FLOOR	1	C
5	274R6-42701		MAT,STEP	2	
6	229F6-42201		SEAL,PANEL COVER	2	

FIG. 56 UNDER COVER
(BD016450) ｱﾝﾀﾞｶﾊﾞｰ

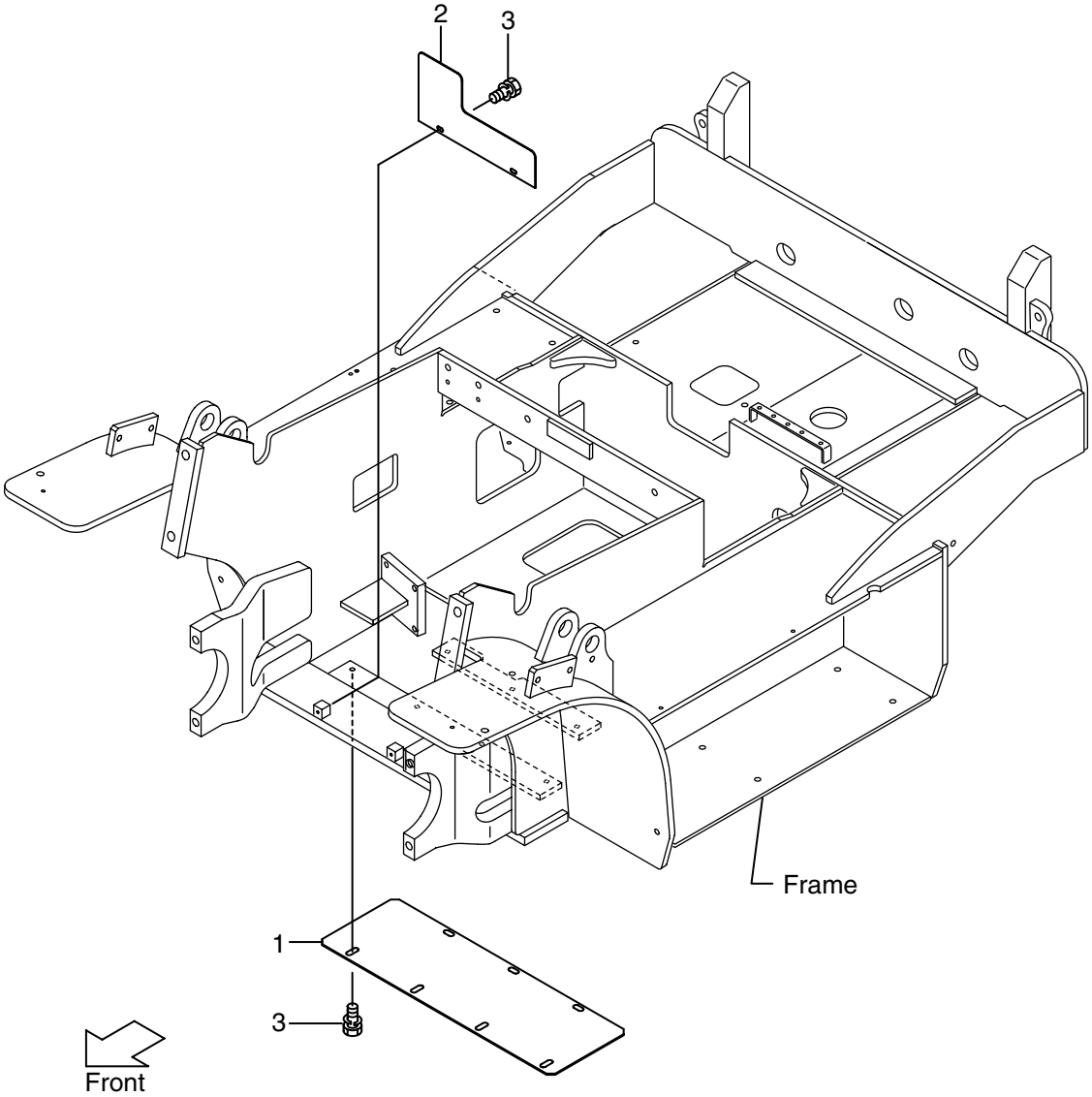

FIG. 56
(BD016450)

A: FB10-8 B: FB15-8 C: FB18-8

Item No.	Part No.	Mark	Description	Req'd	Remarks : serial No.
1	581E3-72101		PLATE,UNDER	1	
2	581E3-72112		GUARD	1	
3	01185-08016		BOLT	9	

FIG. 57 FRONT GUARD BOOT [FC,CS35,FCS35,FCS45]
(BD016460) ﾌﾛﾝﾄｶﾞｰﾄﾞﾌﾞｰﾂ

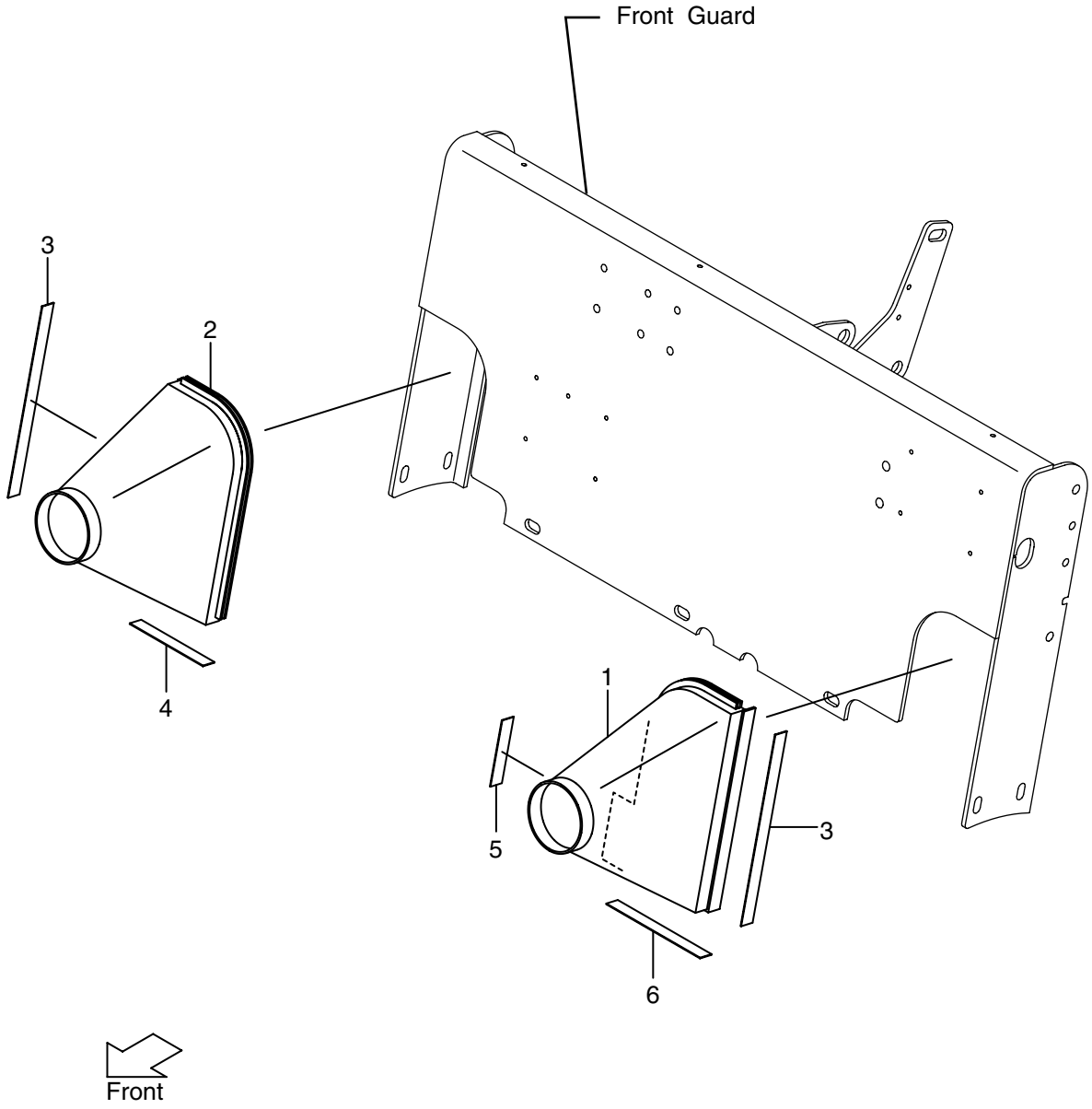

FIG. 57
(BD016460)

A: FB10-8 B: FB15-8 C: FB18-8

Item No.	Part No.	Mark	Description	Req'd	Remarks : serial No.
1	581E3-70251		BOOT,LH	1	
2	581E3-70261		BOOT,RH	1	
3	539A5-32301		TAPE	2	
4	534A5-32621		TAPE,A	1	
5	581E3-72251		TAPE	1	
6	581E3-72261		TAPE	1	

FIG. 58 SEAT
(BD016810) シート

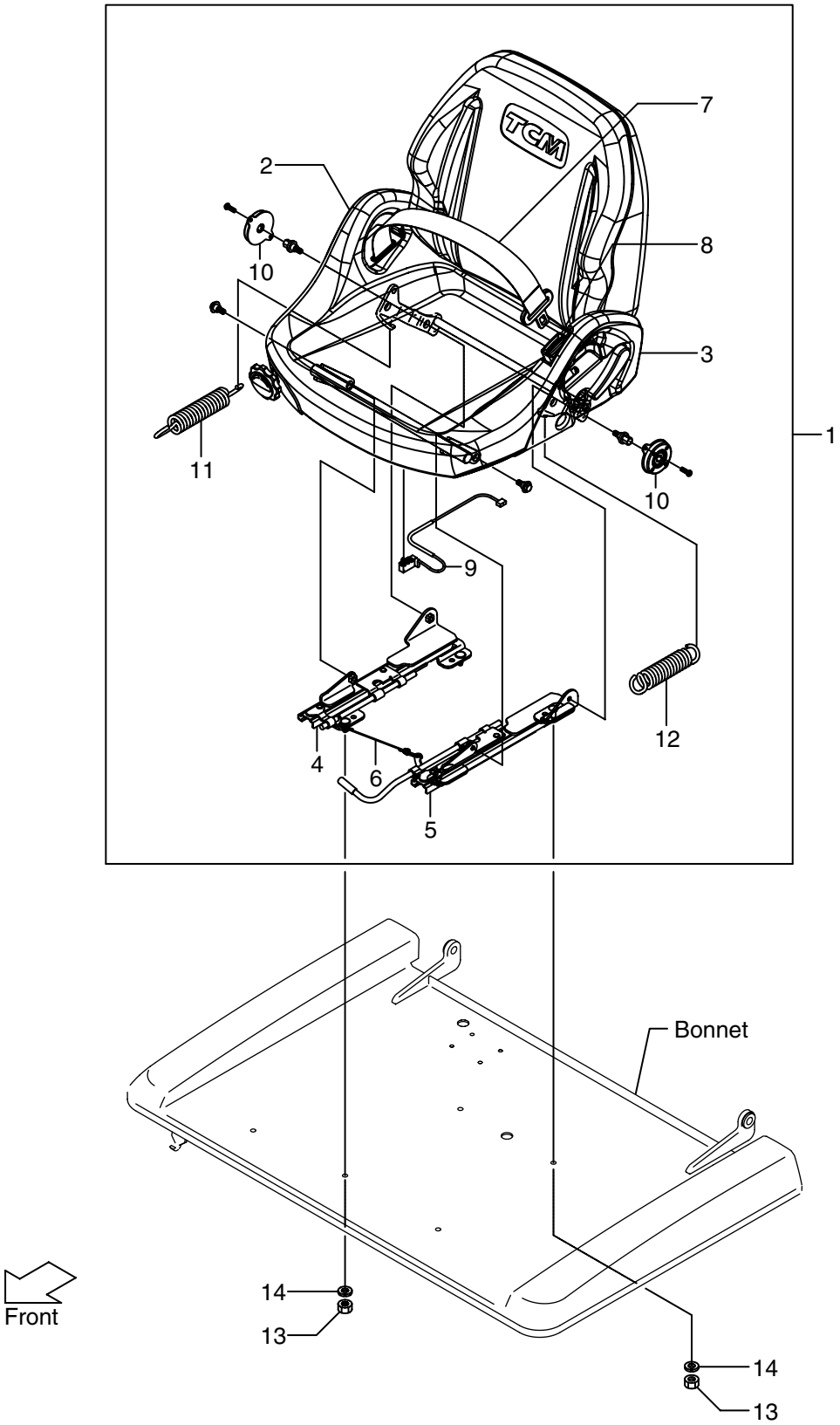

FIG. 58

(BD016810)

A: FB10-8 B: FB15-8 C: FB18-8

Item No.	Part No.	Mark	Description	Req'd	Remarks : serial No.
1	542F3-80101		SEAT,SUS	1	INC.2-12
-	542F3-80101		SEAT,SUS	1	INC.2-12
					SIL/(EXB,EXP)
2	242F6-82041		SHIELD,RH	1	
3	242F6-82051		SHIELD,RH	1	
4	242F6-82081		TRACK,RH	1	
5	242F6-82091		TRACK,LH	1	
6	242F6-82101		WIRE	1	
7	242F6-82111		BELT,SEAT,OUTER	1	
8	242F6-82121		BELT,SEAT,INNER	1	
9	542F3-82011		SWITCH,SEAT	1	
10	242F6-82141		ABSORBER,SUSPENSION	2	
11	242F6-82271		SPRING,TENSION	1	
12	242F6-82281		SPRING,TENSION	1	
13	02010-00008		WASHER	4	
14	01400-00008		NUT	4	

FIG. 59 SEAT [EXB, EXP]
(BD016820) シート

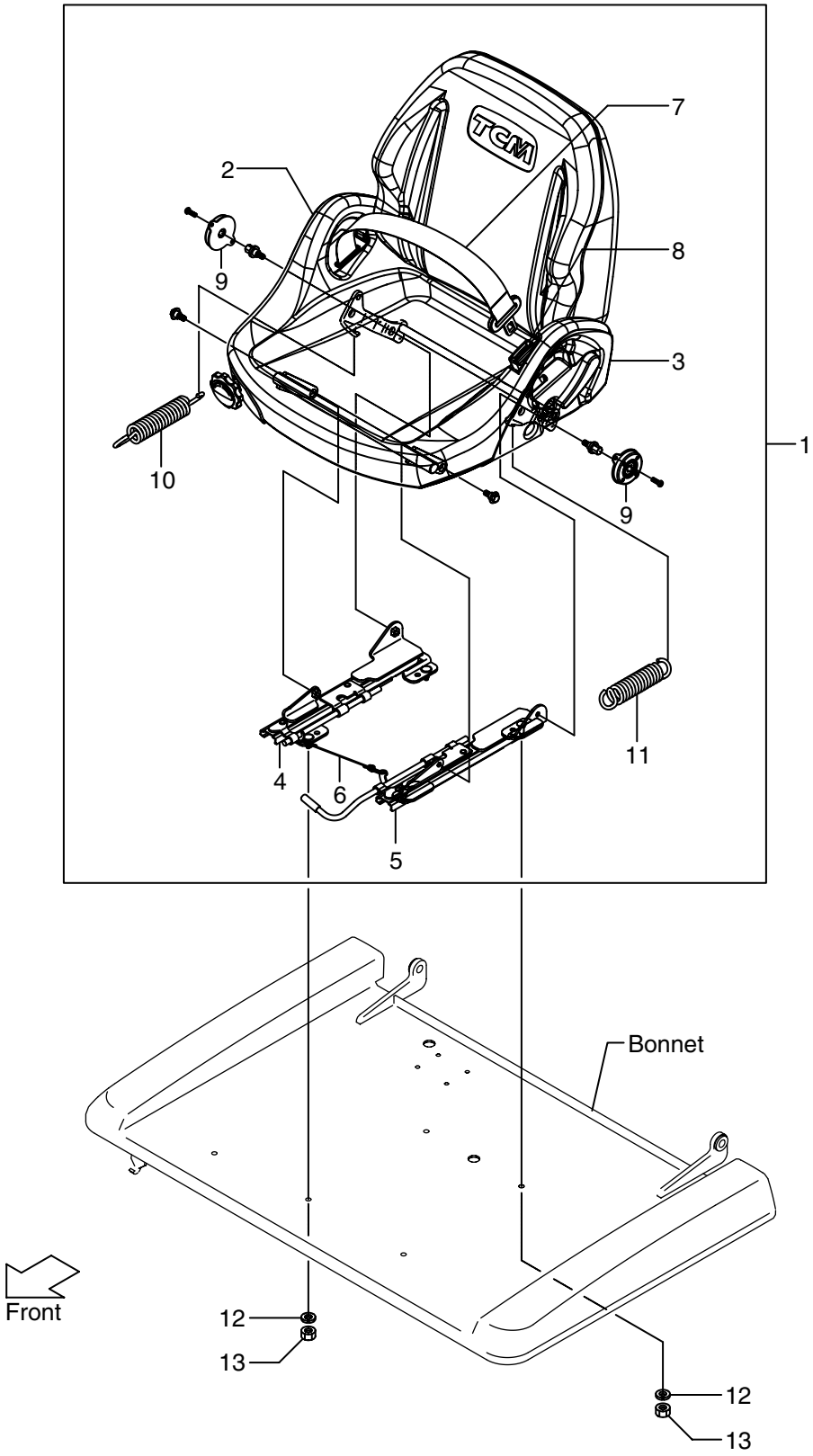

FIG. 59
(BD016820)

A: FB10-8 B: FB15-8 C: FB18-8

Item No.	Part No.	Mark	Description	Req'd	Remarks : serial No.
1	242F6-80101		SEAT,SUS	1	INC.2-11
2	242F6-82041		SHIELD,RH	1	
3	242F6-82051		SHIELD,LH	1	
4	242F6-82081		TRACK,RH	1	
5	242F6-82091		TRACK,LH	1	
6	242F6-82101		WIRE	1	
7	242F6-82111		BELT,SEAT,OUTER	1	
8	242F6-82121		BELT,SEAT,INNER	1	
9	242F6-82141		ABSORBER,SUSPENSION	2	
10	242F6-82271		SPRING,TENSION	1	
11	242F6-82281		SPRING,TENSION	1	
12	02010-00008		WASHER	4	
13	01400-00008		NUT	4	

FIG. 60 SEAT [SETLL]
(BD016830) シート

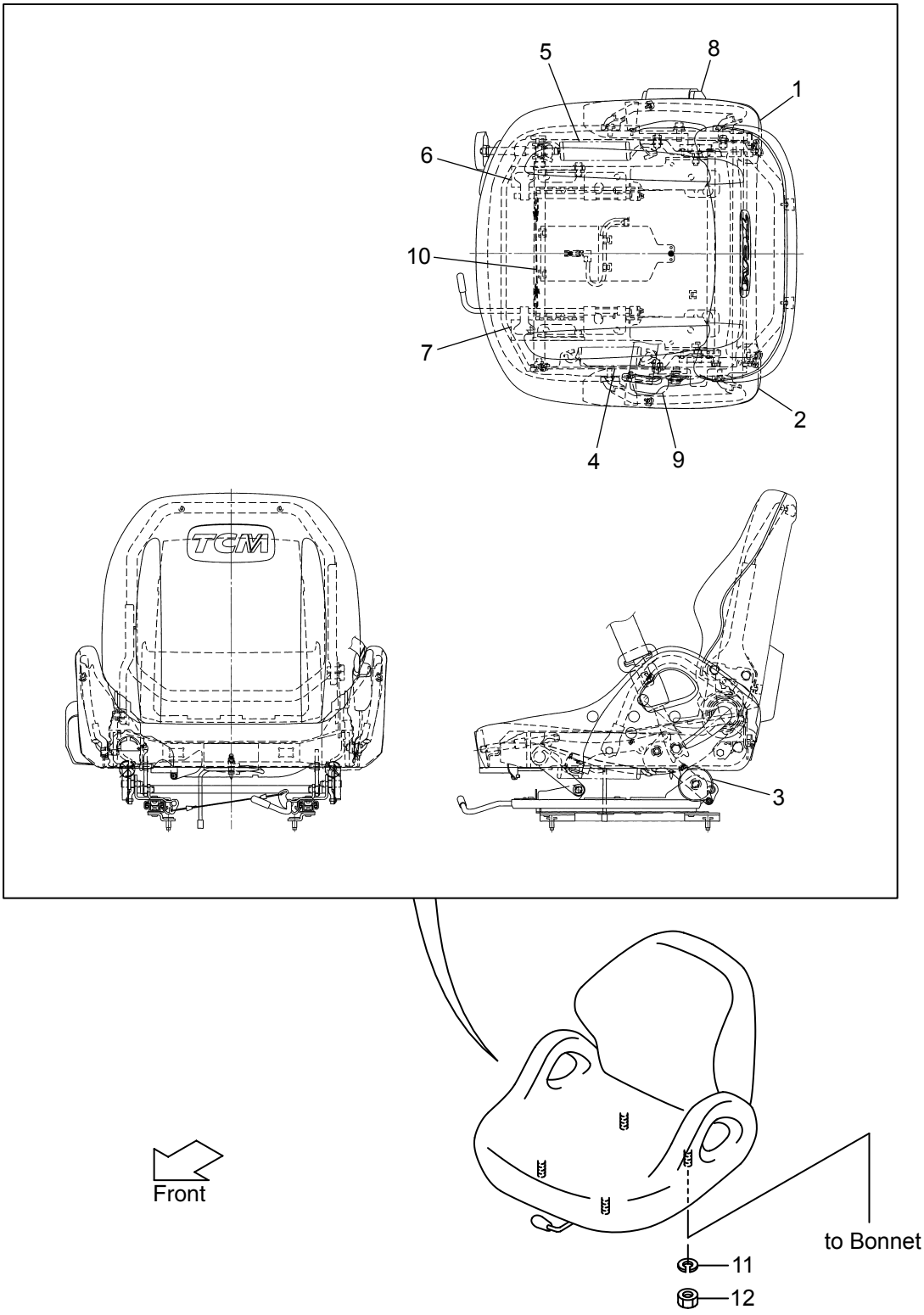

FIG. 60
(BD016830)

A: FB10-8 B: FB15-8 C: FB18-8

Item No.	Part No.	Mark	Description	Req'd	Remarks : serial No.
A	283A6-82501		SEAT ASSY	1	INC.1-10
1	242F6-82041		SHIELD,RH	1	
2	242F6-82051		SHIELD,LH	1	
3	242F6-82141		ABSORBER	2	
4	242F6-82281		SPRING	1	
5	242F6-82271		SPRING	1	
6	242F6-82081		TRACK,RH	1	
7	242F6-82091		TRACK,LH	1	
8	242F6-82111		BELT,OUTER	1	
9	242F6-82121		BELT,INNER	1	
10	242F6-82101		WIRE	1	
11	02010-00008		WASHER	4	
12	01400-00008		NUT	4	

FIG. 61 PUMP UNIT
(BD017110) ﾎﾟﾝﾌﾟﾕﾆｯﾄ

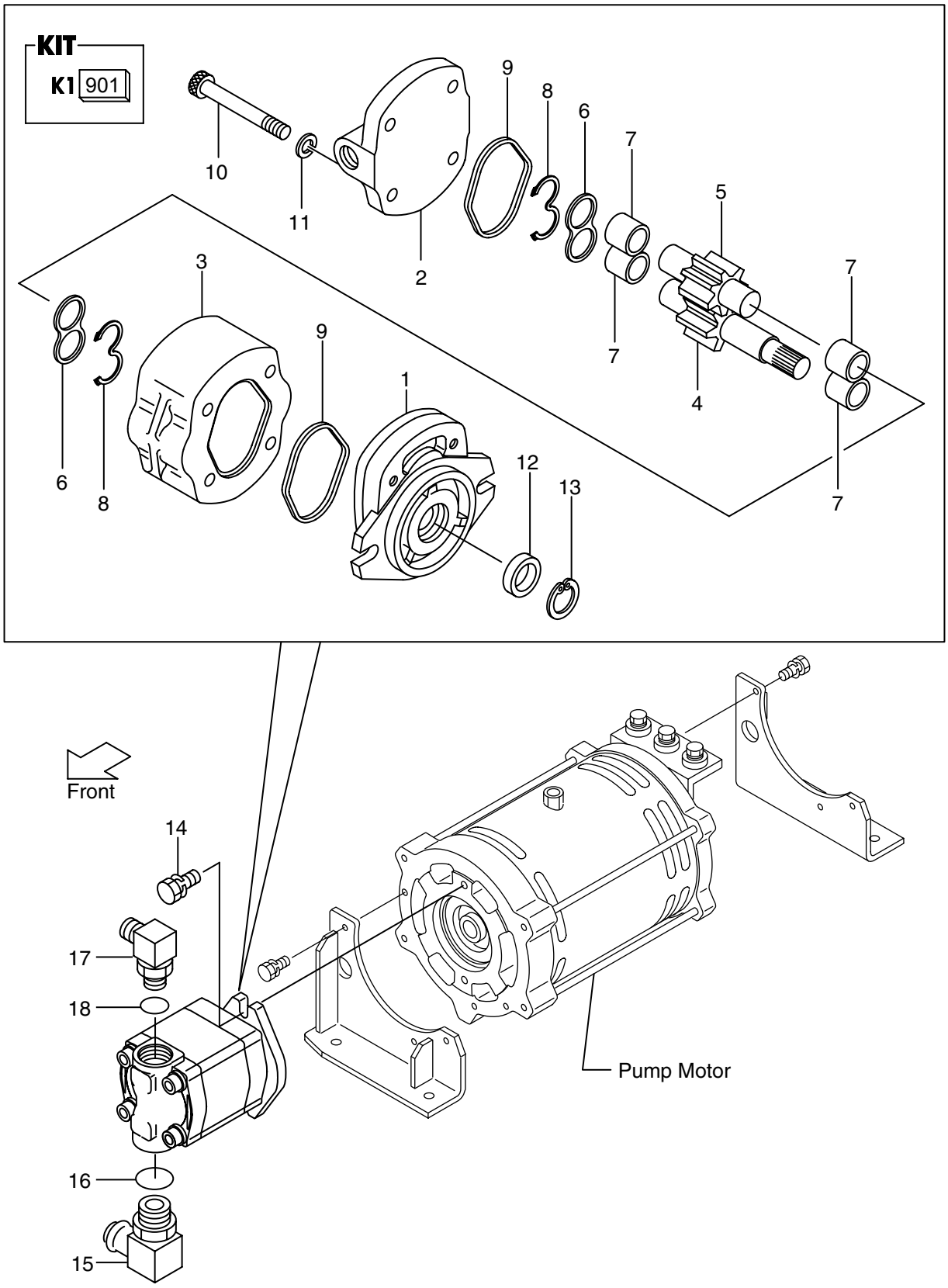

FIG. 61
(BD017110)

A: FB10-8 B: FB15-8 C: FB18-8

Item No.	Part No.	Mark	Description	Req'd	Remarks : serial No.
A1	181E7-10001		PUMP UNIT ASSY	1	INC.1-13
901	R-403-21988	K1	KIT,REPAIR	1	INC.8,9,12,13
1	NO PART NO.	#	COVER,FRONT	1	
2	NO PART NO.	#	COVER,REAR	1	
3	NO PART NO.	#	BODY	1	
4	NO PART NO.	#	GEAR,DRIVE	1	
5	NO PART NO.	#	GEAR,DRIVEN	1	
6	NO PART NO.	#	PLATE,SIDE	2	
7	NO PART NO.	#	BUSHING	4	
8	NO PART NO.	# *	GASKET	2	
9	NO PART NO.	# *	GASKET	2	
10	R-402-65004-01		BOLT	4	
11	R-402-00710-12		BOLT	4	
12	NO PART NO.	# *	SEAL,OIL	1	
13	NO PART NO.	# *	RING,SNAP	1	
14	01186-10025		BOLT&WASHER	2	
A2	214L7-62261		ELBOW ASSY	1	INC.15,16
15	NO PART NO.	#	ELBOW	1	
16	03320-00290		O RING	1	
A3	04150-20404		ELBOW ASSY	1	INC.17,18
17	NO PART NO.	#	ELBOW	1	
18	03320-00180		O RING	1	

FIG. 62 CONTROL VALVE

(BD017310) コントロールバルブ

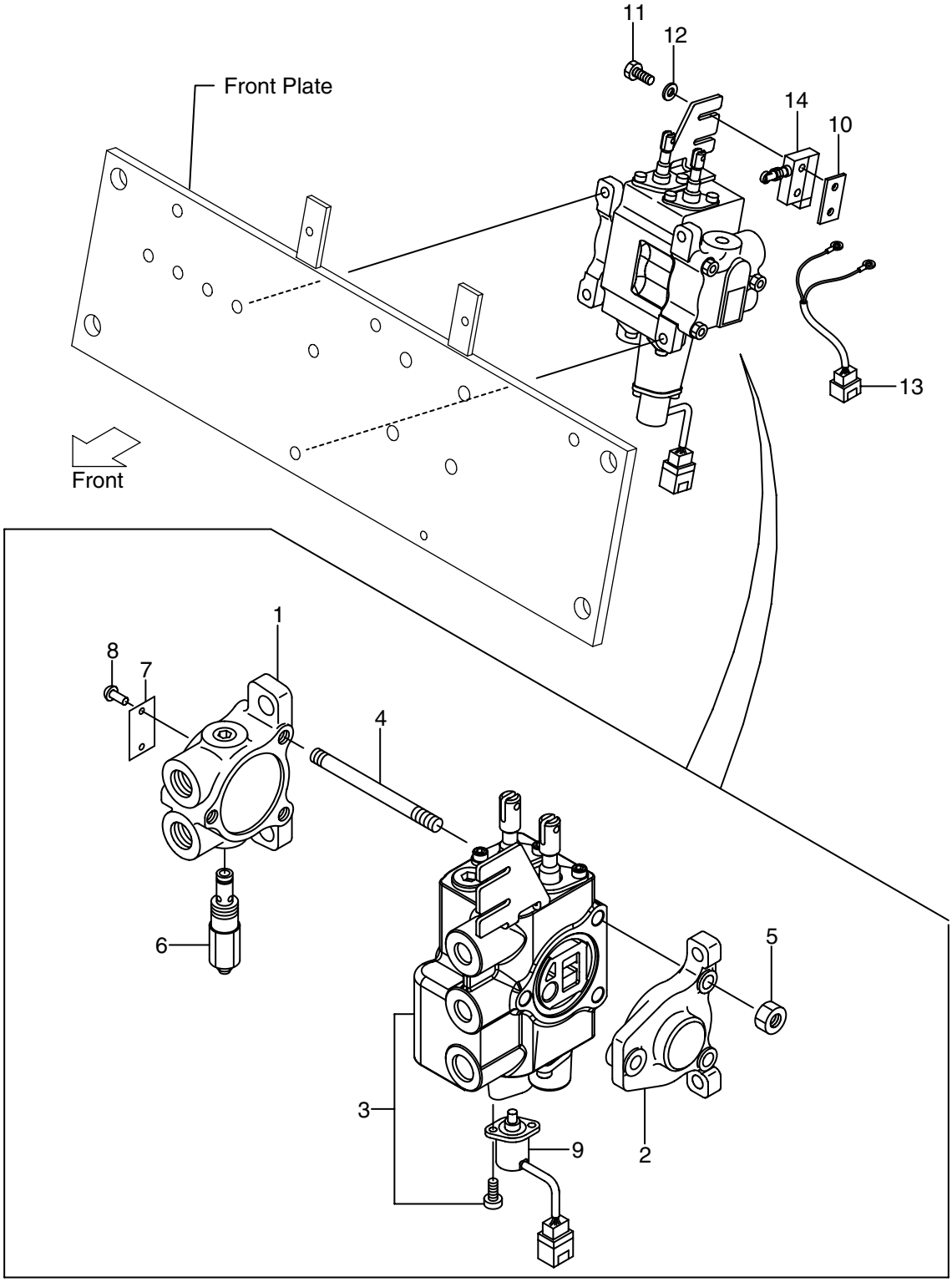

A: FB10-8 B: FB15-8 C: FB18-8

Item No.	Part No.	Mark	Description	Req'd	Remarks : serial No.
A1	281E7-30201		VALVE ASSY,CONTROL	1	A,B INC.1-9
-	281H7-30201		VALVE ASSY,CONTROL	1	C INC.1-9
-	281E7-30201		VALVE ASSY,CONTROL	1	A,B INC.1-9 SIL/(EXB,EXP)
-	281H7-30201		VALVE ASSY,CONTROL	1	C INC.1-9 SIL/(EXB,EXP)
-	581E2-80621		VALVE ASSY,CONTROL	1	A,B INC.1-9 EXB,EXP
-	581H2-80621		VALVE ASSY,CONTROL	1	C INC.1-9 EXB,EXP
1	R-402-36501		FRONT COVER	1	SEE FIG.66
2	R-402-36602		COVER,REAR	1	
3	R-402-37179		COMBINATION VALVE, LIFT&TILT	1	SEE FIG.67
-	R-402-37179		COMBINATION VALVE, LIFT&TILT	1	SIL/(EXB,EXP) SEE FIG.67
-	R-402-37168		COMBINATION VALVE, LIFT&TILT	1	EXB,EXP SEE FIG.67
4	R-402-30905-02		STUD	3	
5	R-023-06632-41		NUT	3	
6	R-402-31092-02		VALVE,MAIN RELIEF	1	A,B
-	R-402-31092-03		VALVE,MAIN RELIEF	1	C
7	NO PART NO.	#	NAME PLATE	1	
8	R-026-50103		RIVET	2	
9	277H2-62701		POTENTIOMETER	1	
10	17912-52141		RETAINER	1	
11	01100-04030		BOLT	2	
12	27047-42241		WASHER	2	
13	27P12-42211		WIRE HARNESS,VALVE	1	
14	27142-64002		SWITCH,MICRO	1	
-	57415-52302		SWITCH,MICRO	1	FC,CS35,FCS35,FCS45

FIG. 63 CONTROL VALVE [3SV]

(BD017320) コントロールバルブ

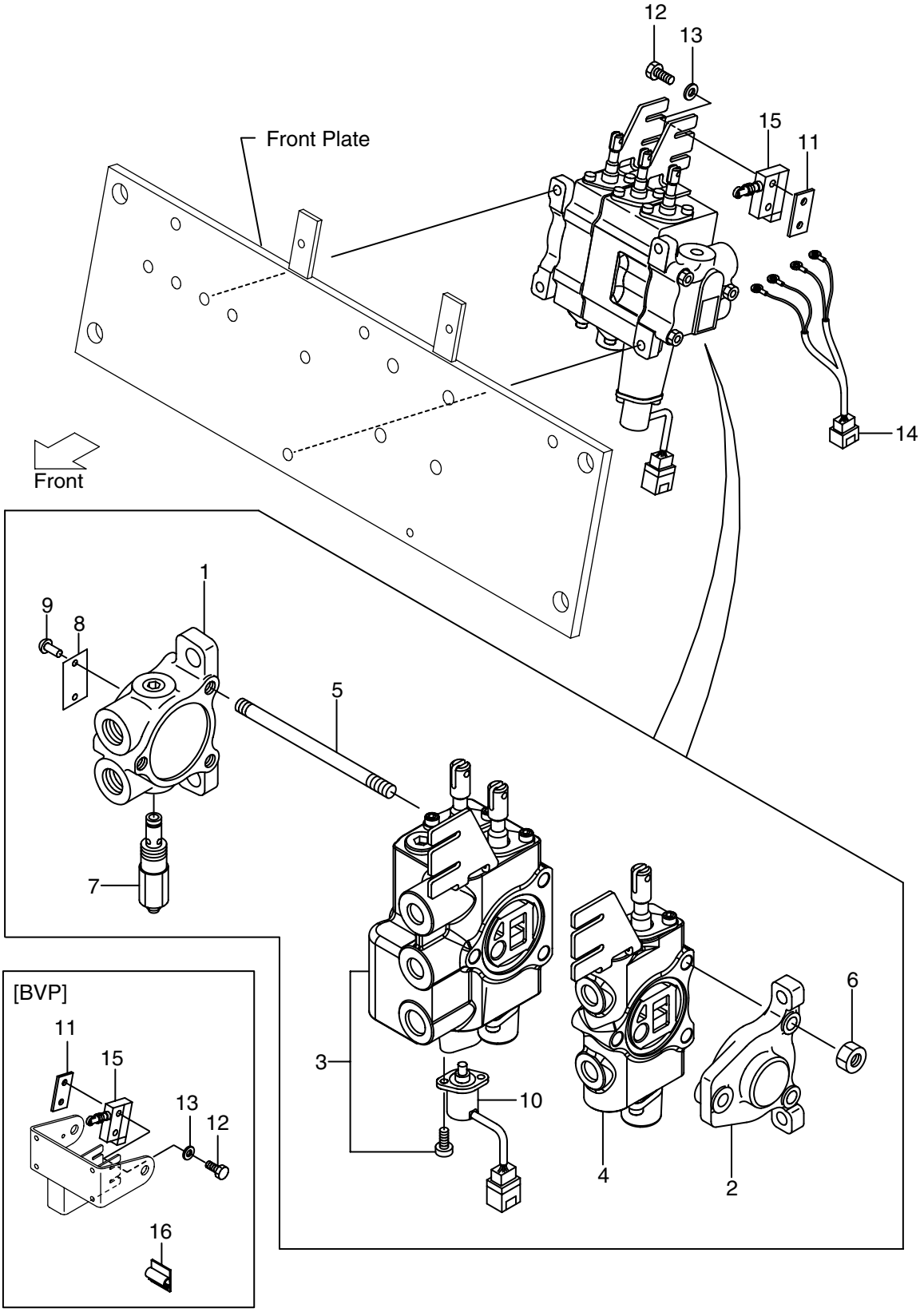

A: FB10-8 B: FB15-8 C: FB18-8

Item No.	Part No.	Mark	Description	Req'd	Remarks : serial No.
A1	281E7-30301		VALVE ASSY,CONTROL	1	A,B INC.1-10
-	281H7-30301		VALVE ASSY,CONTROL	1	C INC.1-10
-	281E7-30301		VALVE ASSY,CONTROL	1	A,B INC.1-10 SIL/(EXB,EXP)
-	281H7-30301		VALVE ASSY,CONTROL	1	C INC.1-10 SIL/(EXB,EXP)
-	581E2-80631		VALVE ASSY,CONTROL	1	A,B INC.1-10 EXB,EXP
-	581H2-80631		VALVE ASSY,CONTROL	1	C INC.1-10 EXB,EXP
1	R-402-36501		FRONT COVER	1	SEE FIG.66
2	R-402-36602		COVER,REAR	1	
3	R-402-37179		COMBINATION VALVE, LIFT&TILT	1	SEE FIG.67
-	R-402-37179		COMBINATION VALVE, LIFT&TILT	1	SIL/(EXB,EXP) SEE FIG.67
-	R-402-37168		COMBINATION VALVE, LIFT&TILT	1	EXB,EXP SEE FIG.67
4	R-402-36976		VALVE - ATT SECTION	1	SEE FIG.68
5	R-402-30905-03		STUD	3	
6	R-023-06632-41		NUT	3	
7	R-402-31092-02		VALVE,MAIN RELIEF	1	A,B
-	R-402-31092-03		VALVE,MAIN RELIEF	1	C
8	NO PART NO.	#	NAME PLATE	1	
9	R-026-50103		RIVET	2	
10	277H2-62701		POTENTIOMETER	1	
11	17912-52141		RETAINER	2	
12	01100-04030		BOLT	4	
13	27047-42241		WASHER	4	
14	27P12-42221		WIRW HARNESS, VALVE SW	1	
-	277H2-42701		WIRW HARNESS, VALVE SW	1	3SV/BVP
15	27142-64002		SWITCH,MICRO	2	
-	57415-52302		SWITCH,MICRO	2	3SV/(FC,CS35,FCS35,FCS45)
16	27732-42311		CLAMP	1	3SV/BVP

FIG. 64 CONTROL VALVE [4SV]

(BD017330) コントロールバルブ

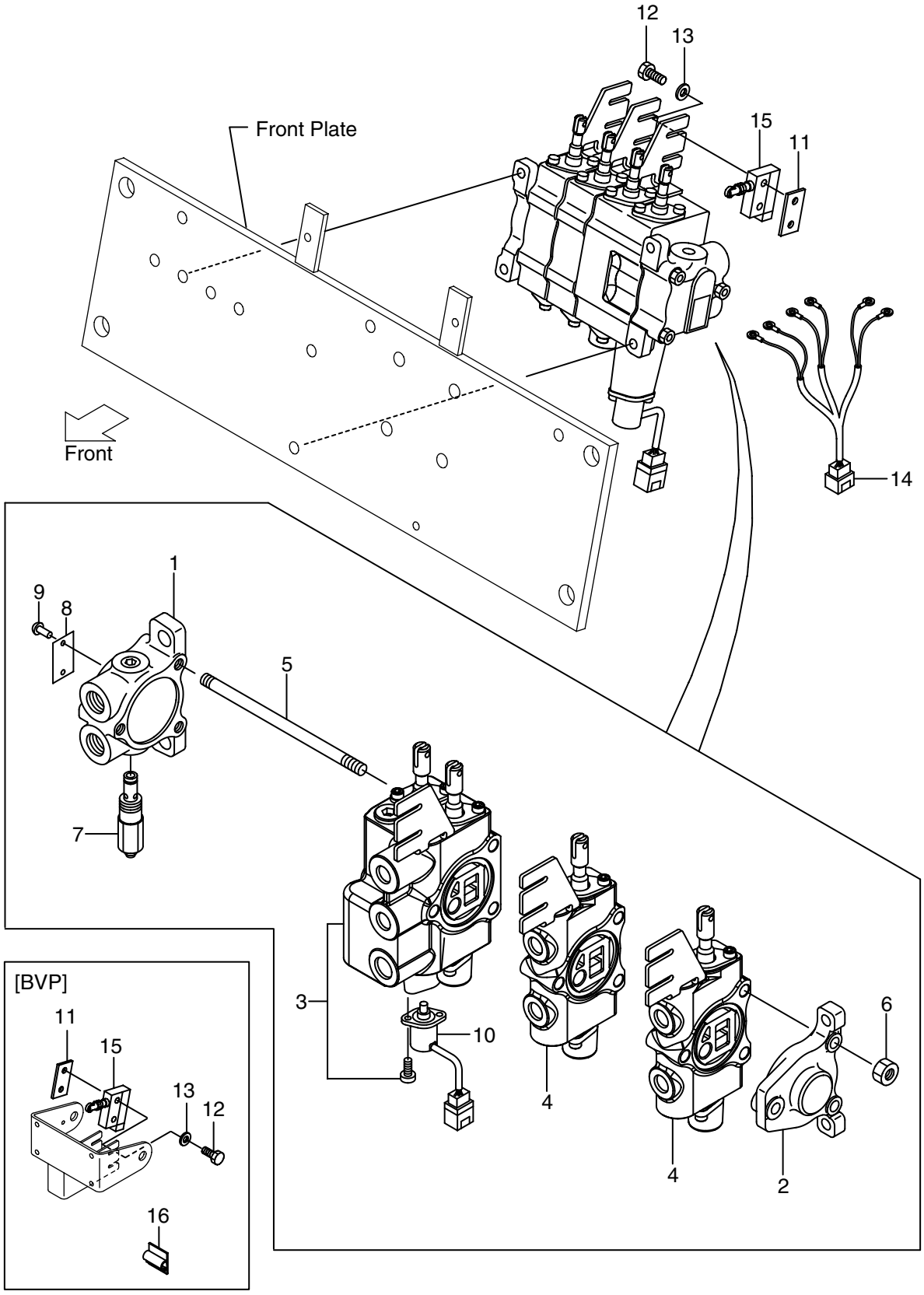

A: FB10-8 B: FB15-8 C: FB18-8

Item No.	Part No.	Mark	Description	Req'd	Remarks : serial No.
A1	281E7-30401		VALVE ASSY,CONTROL	1	A,B INC.1-10
-	281H7-30401		VALVE ASSY,CONTROL	1	C INC.1-10
-	281E7-30401		VALVE ASSY,CONTROL	1	A,B INC.1-10 SIL/(EXB,EXP)
-	281H7-30401		VALVE ASSY,CONTROL	1	C INC.1-10 SIL/(EXB,EXP)
-	581E2-80641		VALVE ASSY,CONTROL	1	A,B INC.1-10 EXB,EXP
-	581H2-80641		VALVE ASSY,CONTROL	1	C INC.1-10 EXB,EXP
1	R-402-36501		FRONT COVER	1	SEE FIG.66
2	R-402-36602		COVER,REAR	1	
3	R-402-37179		COMBINATION VALVE, LIFT&TILT	1	SEE FIG.67
-	R-402-37179		COMBINATION VALVE, LIFT&TILT	1	SIL/(EXB,EXP) SEE FIG.67
-	R-402-37168		COMBINATION VALVE, LIFT&TILT	1	EXB,EXP SEE FIG.67
4	R-402-36976		VALVE - ATT SECTION	2	SEE FIG.68
5	R-402-30905-04		STUD	3	
6	R-023-06632-41		NUT	3	
7	R-402-31092-02		VALVE,MAIN RELIEF	1	A,B
-	R-402-31092-03		VALVE,MAIN RELIEF	1	C
8	NO PART NO.	#	NAME PLATE	1	
9	R-026-50103		RIVET	2	
10	277H2-62701		POTENTIOMETER	1	
11	17912-52141		RETAINER	3	
12	01100-04030		BOLT	6	
13	27047-42241		WASHER	6	
14	27P12-42231		WIRE HARNESS, VALVE SW	1	
-	277H2-42731		WIRW HARNESS, VALVE SW	1	4SV/BVP
15	27142-64002		SWITCH,MICRO	3	
-	57415-52302		SWITCH,MICRO	3	4SV/(FC,CS35,FCS35,FCS45)
16	27732-42311		CLAMP	1	4SV/BVP

FIG. 65 CONTROL VALVE [5SV]

(BD017340) コントロールバルブ

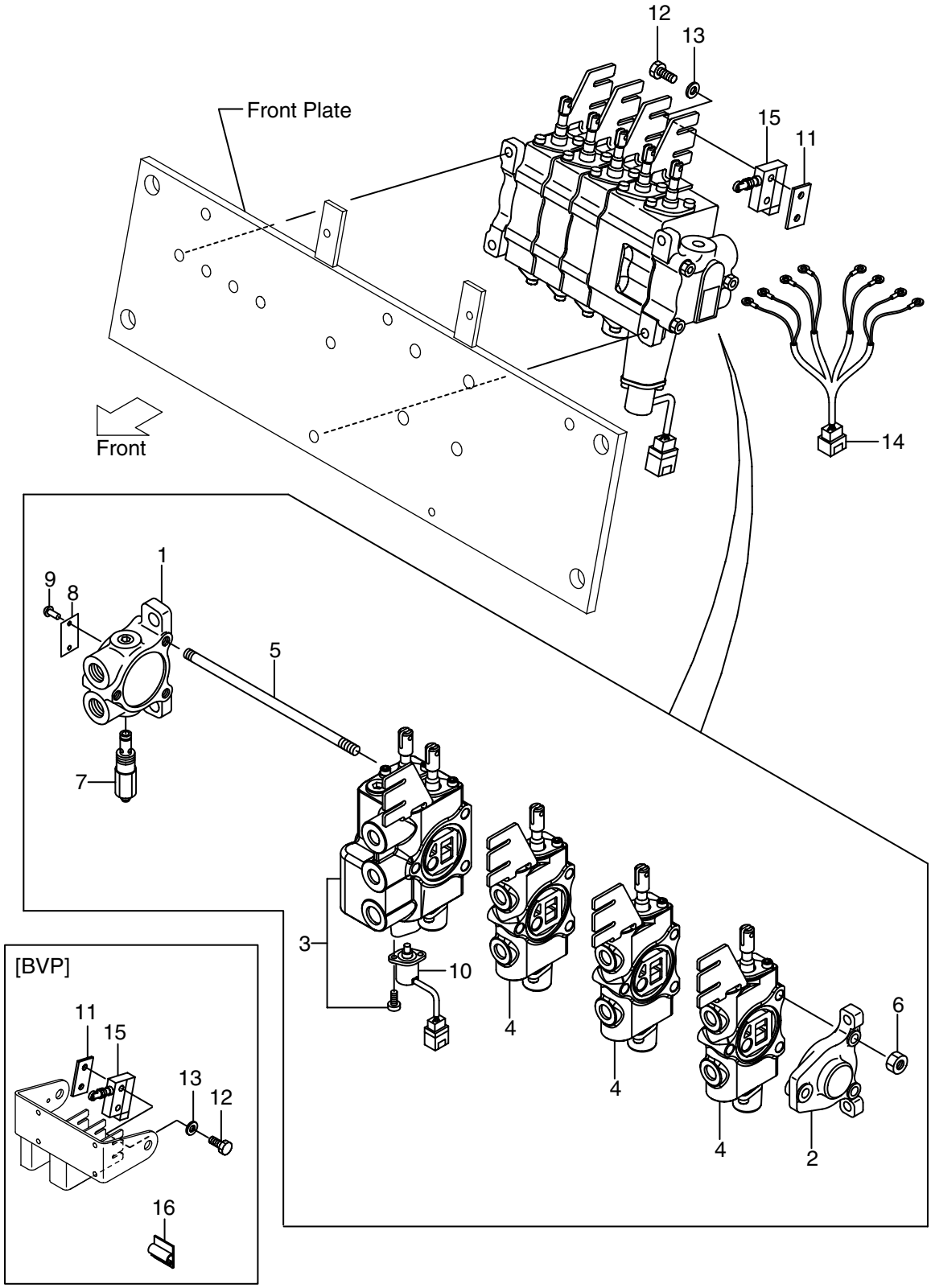

A: FB10-8 B: FB15-8 C: FB18-8

Item No.	Part No.	Mark	Description	Req'd	Remarks : serial No.
A1	281E7-30501		VALVE ASSY,CONTROL	1	A,B INC.1-10
-	281H7-30511		VALVE ASSY,CONTROL	1	C INC.1-10
-	281E7-30501		VALVE ASSY,CONTROL	1	A,B INC.1-10 SIL/(EXB,EXP)
-	281H7-30511		VALVE ASSY,CONTROL	1	C INC.1-10 SIL/(EXB,EXP)
-	581E2-80651		VALVE ASSY,CONTROL	1	A,B INC.1-10 EXB,EXP
-	581H2-80651		VALVE ASSY,CONTROL	1	C INC.1-10 EXB,EXP
1	R-402-36501		FRONT COVER	1	SEE FIG.66
2	R-402-36602		COVER,REAR	1	
3	R-402-37179		COMBINATION VALVE, LIFT&TILT	1	SEE FIG.67
-	R-402-37179		COMBINATION VALVE, LIFT&TILT	1	SIL/(EXB,EXP) SEE FIG.67
-	R-402-37168		COMBINATION VALVE, LIFT&TILT	1	EXB,EXP SEE FIG.67
4	R-402-36976		VALVE - ATT SECTION	3	SEE FIG.68
5	R-402-30905-05		STUD	3	
6	R-023-06632-41		NUT	3	
7	R-402-31092-02		VALVE,MAIN RELIEF	1	A,B
-	R-402-31092-03		VALVE,MAIN RELIEF	1	C
8	NO PART NO.	#	NAME PLATE	1	
9	R-026-50103		RIVET	2	
10	277H2-62701		POTENTIOMETER	1	
11	17912-52141		RETAINER	4	
12	01100-04030		BOLT	8	
13	27047-42241		WASHER	8	
14	27P12-42241		WIRE HARNESS, VALVE SW	1	
-	277H2-42741		WIRE HARNESS, VALVE SW	1	5SV/BVP
15	27142-64002		SWITCH,MICRO	4	
-	57415-52302		SWITCH,MICRO	4	5SV/(FC,CS35,FCS35,FCS45)
16	27732-42311		CLAMP	1	5SV/BVP

FIG. 66 FRONT COVER
(BD017350) ﾌﾛﾝﾄｶﾊﾞｰ

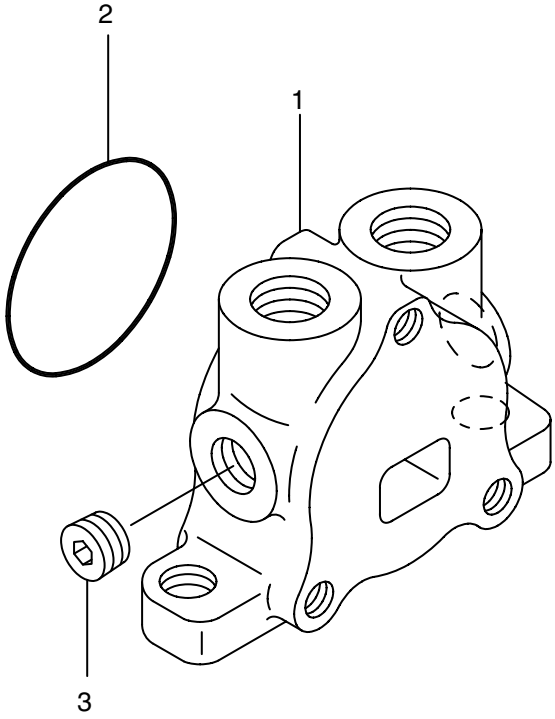

FIG. 66
(BD017350)

A: FB10-8 B: FB15-8 C: FB18-8

Item No.	Part No.	Mark	Description	Req'd	Remarks : serial No.
A1	R-402-36501		COVER ASSY,FRONT	1	INC.1-3
1	R-402-30813-01		COVER,FRONT	1	
2	R-400-50976-01		O RING	1	
3	R-035-50721-02		PLUG	1	

FIG. 67 COMBINATION VALVE
(BD017360) コンビネーションバルブ

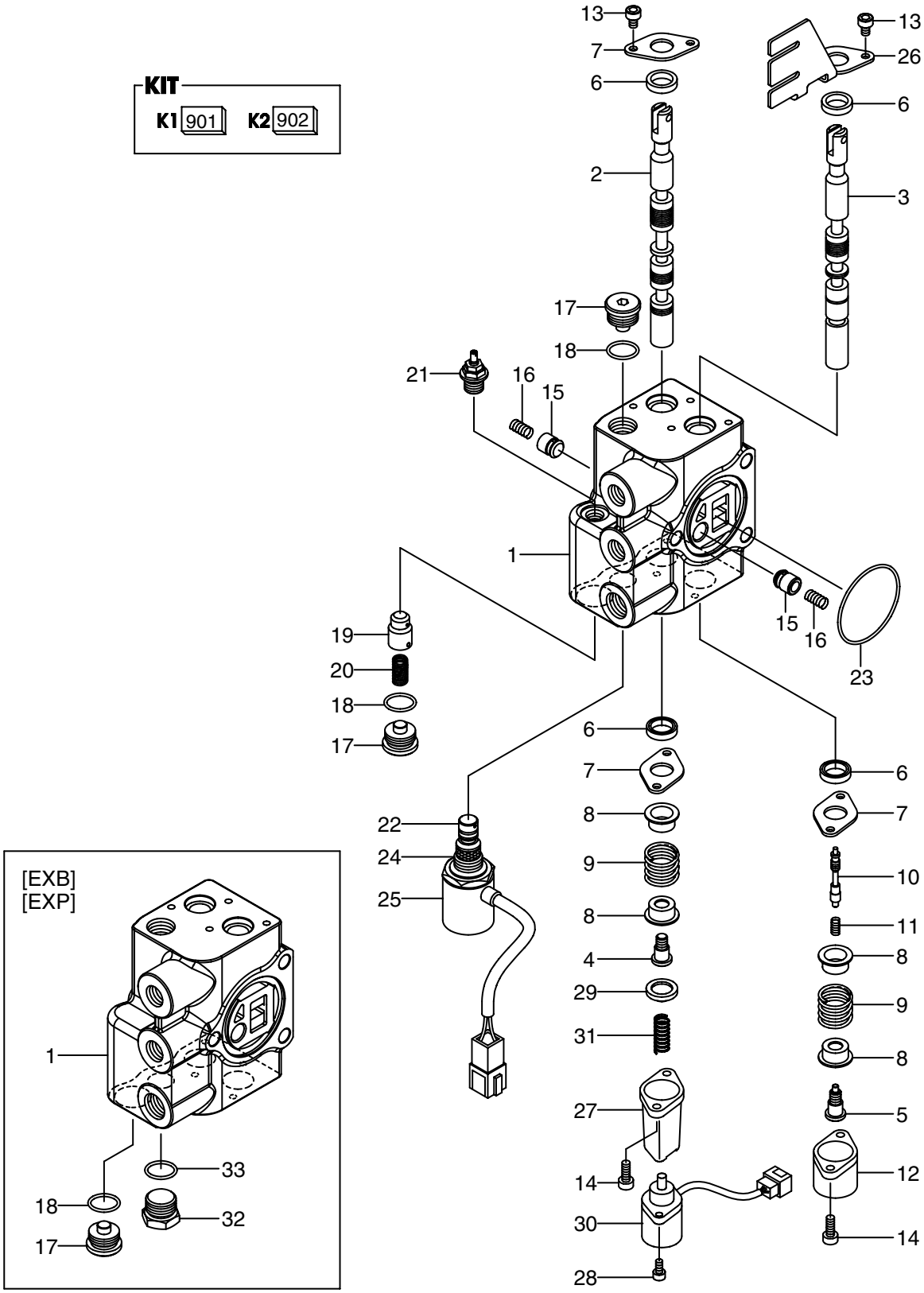

A: FB10-8 B: FB15-8 C: FB18-8

Item No.	Part No.	Mark	Description	Req'd	Remarks : serial No.
A1	R-402-37179		VALVE ASSY,COMBINATI, LIFT&TILT	1	INC.1-31
A2	R-402-37168		VALVE ASSY,COMBINATI, LIFT&TILT	1	INC.1-18,23,26-33 EXB,EXP
901	R-402-31181-04	K1	KIT,SEAL	1	INC.6,18,23
902	R-402-31181-05	K2	KIT,SEAL	1	INC.6,18,23,33 EXB,EXP
1	R-402-30963-06		BODY	1	
-	R-402-30963-07		BODY	1	EXB,EXP
2	R-402-31160-01		SPOOL,LIFT	1	
3	R-402-31160-02		SPOOL,TILT	1	
4	R-402-30863-02		SCREW	1	
5	R-402-30863-01		SCREW	1	
6	R-402-65308	*	SEAL,DUST	4	
7	R-402-31094		PLATE,SEAL	3	
8	R-402-30621		RETAINER	4	
9	R-402-30862		SPRING	2	
10	R-402-31159		PILOT	1	
11	R-402-30861		SPRING	1	
12	R-402-30843		CAP	1	
13	R-022-20044		BOLT	4	
14	R-022-20046		BOLT	4	
15	R-402-30821-02		POPPET	2	
16	R-402-31047		SPRING	2	
17	R-402-31057		PLUG	2	INC.18
18	R-036-10218	*	O RING	2	
19	R-402-31035		POPPET	1	
-	NOT APPLICABLE		POPPET	999	EXB,EXP
20	R-402-31038		SPRING	1	
-	NOT APPLICABLE		SPRING	999	EXB,EXP
21	R-402-31025		EMERGENCY	1	
-	NOT APPLICABLE		EMERGENCY	999	EXB,EXP
22	R-402-31069		CASE	1	
-	NOT APPLICABLE		CASE	999	EXB,EXP
23	R-400-50976-01	*	O RING	1	
A3	R-402-31254-02		VALVE ASSY,SOLENOID	1	INC.24,25
-	NOT APPLICABLE		VALVE ASSY,SOLENOID	999	INC.24,25 EXB,EXP
24	R-402-31233		SOLENOID	1	
-	NOT APPLICABLE		SOLENOID	999	EXB,EXP
25	R-402-31252-02		COIL	1	
-	NOT APPLICABLE		COIL	999	EXB,EXP
26	R-402-31165		BRACKET	1	
27	R-402-30896-01		CAP	1	
28	R-022-25072		BOLT	2	
29	R-402-30908-01		PLATE	1	
30	R-402-65154		SENSOR	1	
31	R-402-30910		SPRING	1	
32	R-402-30893		PLUG	1	INC.33 EXB,EXP

FIG. 67
(BD017360)

A: FB10-8 B: FB15-8 C: FB18-8

Item No.	Part No.	Mark	Description	Req'd	Remarks : serial No.
33	R-400-50252-09	*	O RING	1	EXB,EXP

MEMO

FIG. 68 VALVE - ATTACHMENT SECTION

(BD017370) ﾊﾞﾙﾌﾞ - ｱﾀｯﾁﾒﾝﾄｾｸｼｮﾝ

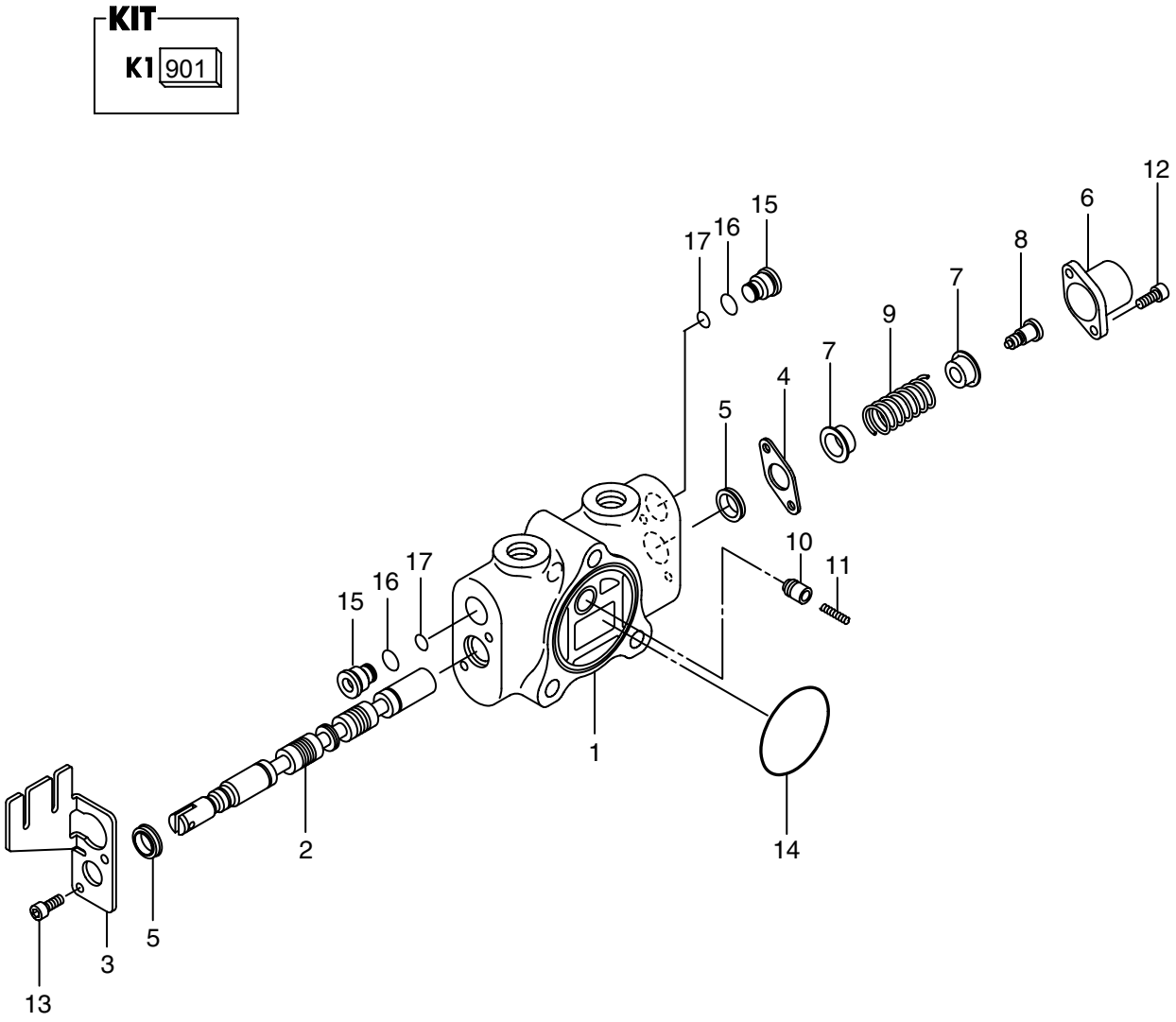

FIG. 68
(BD017370)

A: FB10-8 B: FB15-8 C: FB18-8

Item No.	Part No.	Mark	Description	Req'd	Remarks : serial No.
A1	R-402-36976		SECTION ASSY	1	INC.1-17 3SV
-	R-402-36976		SECTION ASSY	2	INC.1-17 4SV
-	R-402-36976		SECTION ASSY	3	INC.1-17 5SV
901	R-402-31115-02	K1	KIT,SEAL	1	INC.5,14,16,17 3SV
-	R-402-31115-02	K1	KIT,SEAL	2	INC.5,14,16,17 4SV
-	R-402-31115-02	K1	KIT,SEAL	3	INC.5,14,16,17 5SV
1	R-402-30789-14		BODY	1	3SV
-	R-402-30789-14		BODY	2	4SV
-	R-402-30789-14		BODY	3	5SV
2	R-402-31160-03		SPOOL	1	3SV
-	R-402-31160-03		SPOOL	2	4SV
-	R-402-31160-03		SPOOL	3	5SV
3	R-402-31165		BRACKET,Q	1	3SV
-	R-402-31165		BRACKET,Q	2	4SV
-	R-402-31165		BRACKET,Q	3	5SV
4	R-402-31094		PLATE	1	3SV
-	R-402-31094		PLATE	2	4SV
-	R-402-31094		PLATE	3	5SV
5	R-402-65308	*	SEAL,DUST	2	3SV
-	R-402-65308	*	SEAL,DUST	4	4SV
-	R-402-65308	*	SEAL,DUST	6	5SV
6	R-402-30843		CAP	1	3SV
-	R-402-30843		CAP	2	4SV
-	R-402-30843		CAP	3	5SV
7	R-402-30621		RETAINER	2	3SV
-	R-402-30621		RETAINER	4	4SV
-	R-402-30621		RETAINER	6	5SV
8	R-402-30863-02		SCREW,SET	1	3SV
-	R-402-30863-02		SCREW,SET	2	4SV
-	R-402-30863-02		SCREW,SET	3	5SV
9	R-402-30862		SPRING	1	3SV
-	R-402-30862		SPRING	2	4SV
-	R-402-30862		SPRING	3	5SV
10	R-402-30821-02		POPPET	1	3SV
-	R-402-30821-02		POPPET	2	4SV
-	R-402-30821-02		POPPET	3	5SV
11	R-402-31047		SPRING	1	3SV
-	R-402-31047		SPRING	2	4SV
-	R-402-31047		SPRING	3	5SV
12	R-022-20046		BOLT	2	3SV
-	R-022-20046		BOLT	4	4SV
-	R-022-20046		BOLT	6	5SV
13	R-022-20044		BOLT	2	3SV
-	R-022-20044		BOLT	4	4SV

FIG. 68
(BD017370)

A: FB10-8 B: FB15-8 C: FB18-8

Item No.	Part No.	Mark	Description	Req'd	Remarks : serial No.
13	R-022-20044		BOLT	6	5SV
14	R-400-50976-01	*	O RING	1	3SV
-	R-400-50976-01	*	O RING	2	4SV
-	R-400-50976-01	*	O RING	3	5SV
15	R-402-30865		PLUG	2	INC.16,17 3SV
-	R-402-30865		PLUG	4	INC.16,17 4SV
-	R-402-30865		PLUG	6	INC.16,17 5SV
16	R-036-10218	*	O RING	2	3SV
-	R-036-10218	*	O RING	4	4SV
-	R-036-10218	*	O RING	6	5SV
17	R-036-15510-14	*	O RING	2	3SV
-	R-036-15510-14	*	O RING	4	4SV
-	R-036-15510-14	*	O RING	6	5SV

MEMO

FIG. 69 CONTROL VALVE FITTING

(BD017380) コントロールバルブフィッティング

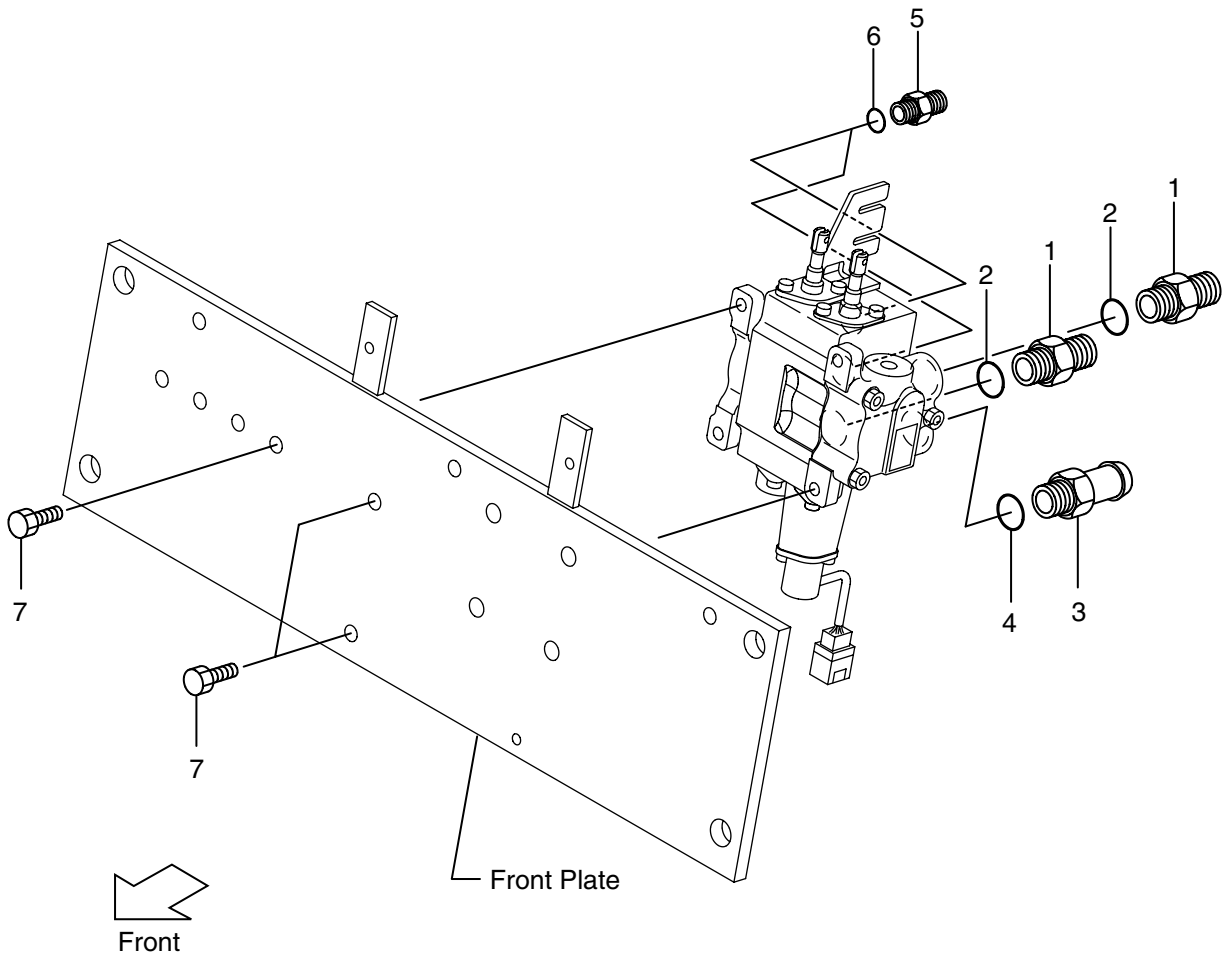

FIG. 69
(BD017380)

A: FB10-8 B: FB15-8 C: FB18-8

Item No.	Part No.	Mark	Description	Req'd	Remarks : serial No.
A1	04134-20404		NIPPLE ASSY	2	INC.1,2
1	NO PART NO.	#	NIPPLE	2	
2	03320-00180		O RING	2	
A2	283A7-30501		NIPPLE ASSY	1	INC.3,4
3	NO PART NO.	#	NIPPLE	1	
4	03320-00180		O RING	1	
A3	04134-20303		NIPPLE ASSY	2	INC.5,6
5	NO PART NO.	#	NIPPLE	2	
6	03320-00140		O RING	2	
7	216G7-32041		BOLT	3	

FIG. 70 VALVE CONTROL

(BD0173A0) ﾊﾞﾙﾌﾞｺﾝﾄﾛｰﾙ

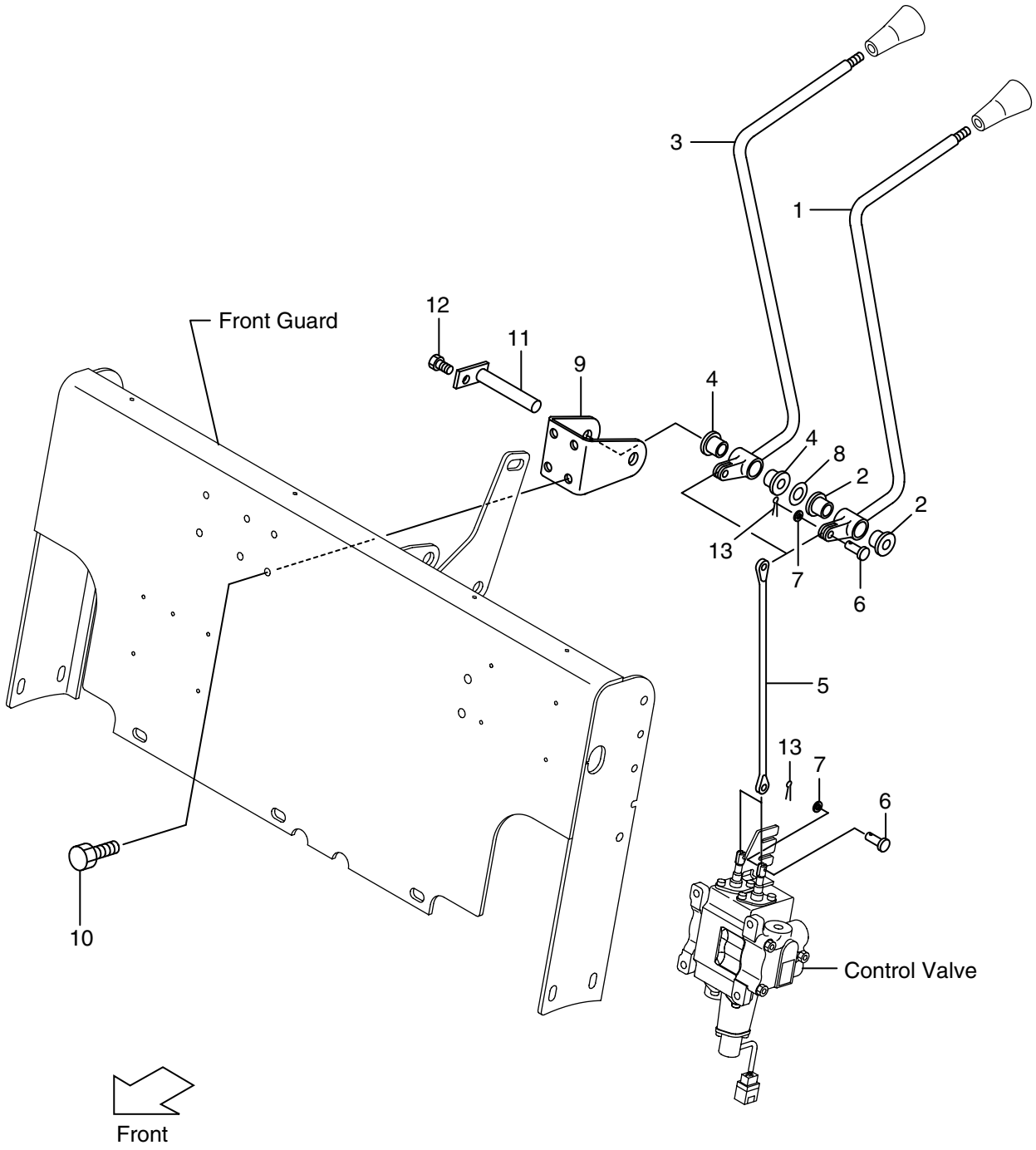

FIG. 70

(BD0173A0)

A: FB10-8 B: FB15-8 C: FB18-8

Item No.	Part No.	Mark	Description	Req'd	Remarks : serial No.
A1	216G7-40012		LEVER ASSY,LIFT	1	INC.1,2
1	NO PART NO.	#	LEVER,LIFT	1	
2	214A7-42071		BUSHING	2	
A2	216G7-40022		LEVER ASSY,TILT	1	INC.3,4
3	NO PART NO.	#	LEVER,TILT	1	
4	214A7-42071		BUSHING	2	
5	23657-42081		JOI NT	2	
6	22717-40061		PIN,CLEVIS	4	
7	02000-00005		WASHER	4	
8	22517-40051		SHIM,T-0.2	3	
9	216G7-42001		BRACKET	1	
10	216H3-92281		BOLT	4	
11	23647-40041		SHAFT	1	
-	529F3-70401		SHAFT	1	FC,CS35,FCS35,FCS45
12	01183-06012		BOLT	1	
13	02200-16010		PIN,COTTER	4	

FIG. 71 VALVE CONTROL [3SV]

(BD0173B0) ﾊﾞﾙﾌﾞｺﾝﾄﾛｰﾙ

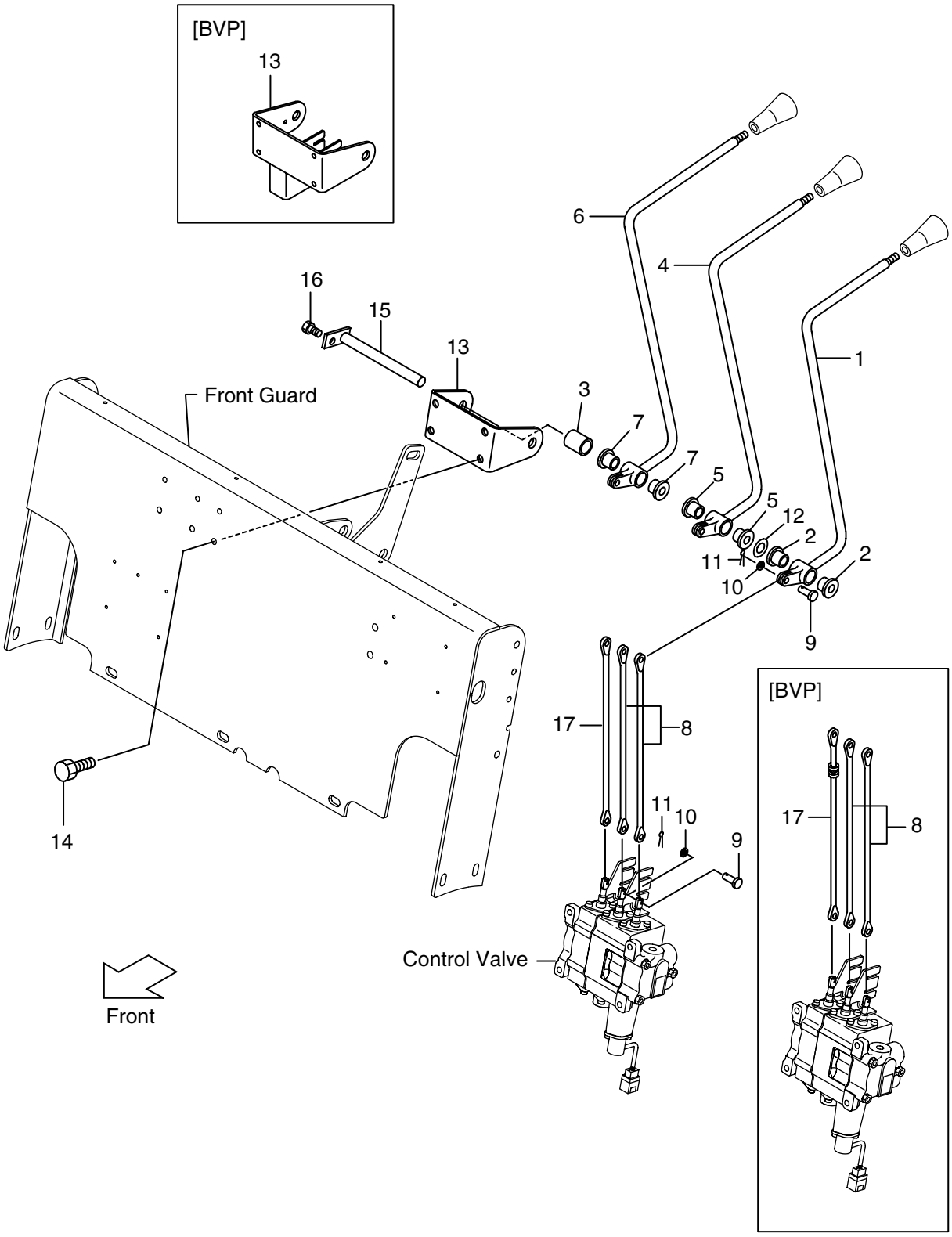

A: FB10-8 B: FB15-8 C: FB18-8

Item No.	Part No.	Mark	Description	Req'd	Remarks : serial No.
A1	216G7-40012		LEVER ASSY,LIFT	1	INC.1,2
1	NO PART NO.	#	LEVER	1	
2	214A7-42071		BUSHING	2	
3	23657-42131		COLLAR	1	
A2	216G7-40022		LEVER ASSY,TILT	1	INC.4,5
4	NO PART NO.	#	LEVER	1	
5	214A7-42071		BUSHING	2	
A3	216G7-40032		LEVER ASSY,THIRD	1	INC.6,7
6	NO PART NO.	#	LEVER	1	
7	214A7-42071		BUSHING	2	
8	23657-42081		JOINT	2	
9	22717-40061		PIN,CLEVIS	6	
10	02000-00005		WASHER	6	
11	02200-16010		PIN,COTTER	6	
12	22517-40051		SHIM	3	
13	216G7-42011		BRACKET	1	
-	581E7-42001		BRACKET	1	3SV/BVP, 3SV/BVP/(FC,CS35,FCS35, FCS45)
14	216H3-92281		BOLT	4	
15	23457-42041		SHAFT	1	
-	529F3-70411		SHAFT	1	3SV/(FC,CS35,FCS35,FCS45)
-	23657-42041		SHAFT	1	3SV/BVP
-	529F3-70411		SHAFT	1	3SV/BVP/(FC,CS35,FCS35, FCS45)
16	01183-06012		BOLT	1	
17	23657-42081		JOINT	1	
-	581E7-42101		JOINT	1	3SV/BVP, 3SV/BVP/(FC,CS35,FCS35, FCS45)

FIG. 72 VALVE CONTROL [4SV]

(BD0173C0) ﾊﾞﾙﾌﾞｺﾝﾄﾛｰﾙ

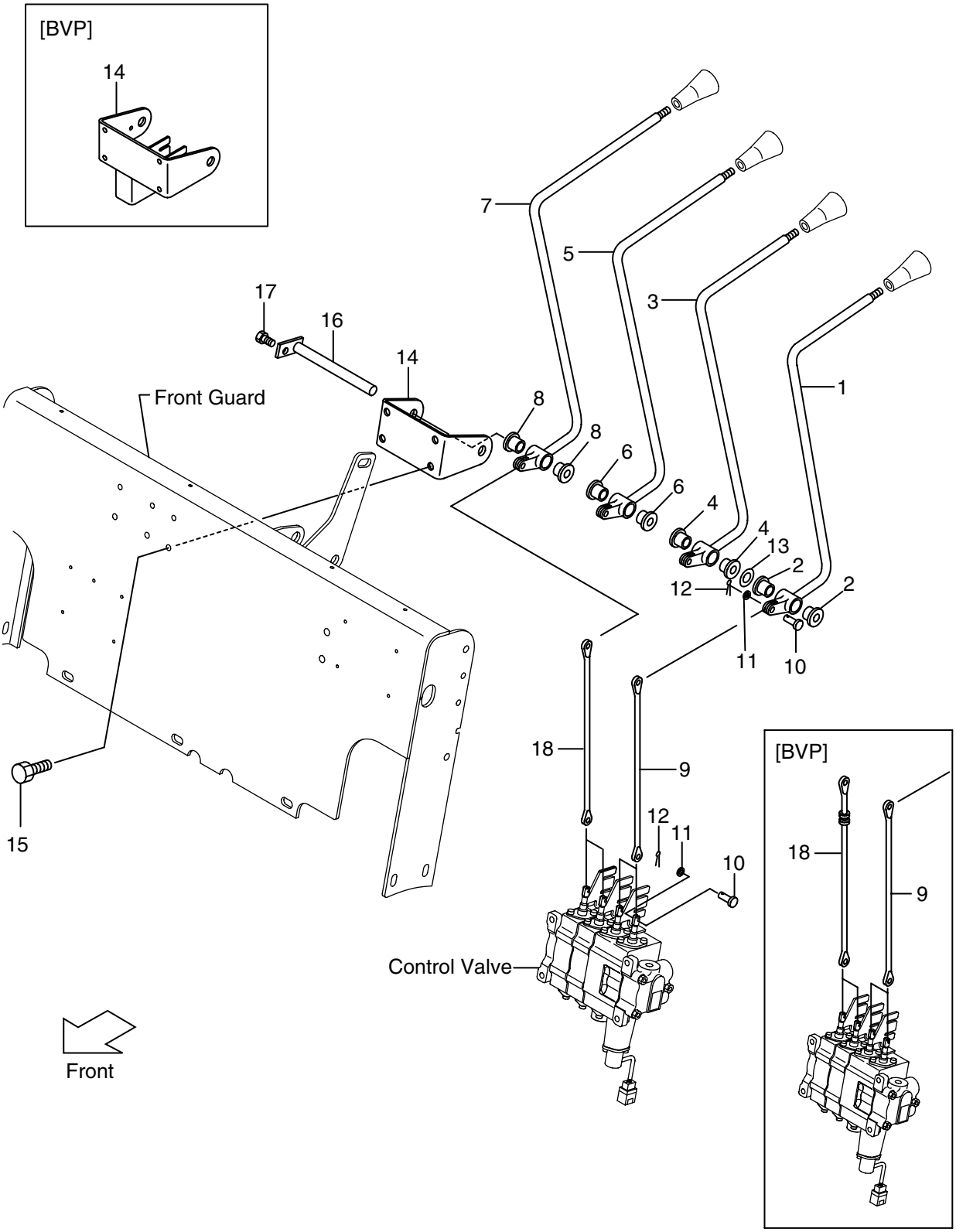

A: FB10-8 B: FB15-8 C: FB18-8

Item No.	Part No.	Mark	Description	Req'd	Remarks : serial No.
A1	216G7-40012		LEVER ASSY,LIFT	1	INC.1,2
1	NO PART NO.	#	LEVER	1	
2	214A7-42071		BUSHING	2	
A2	216G7-40022		LEVER ASSY,TILT	1	INC.3,4
3	NO PART NO.	#	LEVER	1	
4	214A7-42071		BUSHING	2	
A3	216G7-40032		LEVER ASSY,THIRD	1	INC.5,6
5	NO PART NO.	#	LEVER	1	
6	214A7-42071		BUSHING	2	
A4	216G7-40042		LEVER ASSY,FOURTH	1	INC.7,8
7	NO PART NO.	#	LEVER	1	
8	214A7-42071		BUSHING	2	
9	23657-42081		JOINT	2	
10	22717-40061		PIN,CLEVIS	8	
11	02000-00005		WASHER	8	
12	02200-16010		PIN,COTTER	8	
13	22517-40051		SHIM	3	
14	216G7-42011		BRACKET	1	
-	581E7-42001		BRACKET	1	4SV/BVP, 4SV/BVP/(FC,CS35,FCS35, FCS45)
15	216H3-92281		BOLT	4	
16	23457-42041		SHAFT	1	
-	23457-42041		SHAFT	1	4SV/BVP
-	529F3-70411		SHAFT	1	4SV/(FC,CS35,FCS35,FCS45)
-	529F3-70411		SHAFT	1	4SV/BVP/(FC,CS35,FCS35, FCS45)
17	01183-06012		BOLT	1	
18	23657-42081		JOINT	2	
-	581E7-42101		JOINT	2	4SV/BVP, 4SV/BVP/(FC,CS35,FCS35, FCS45)

FIG. 73 VALVE CONTROL [5SV]

(BD0173D0) ﾊﾞﾙﾌﾞｺﾝﾄﾛｰﾙ

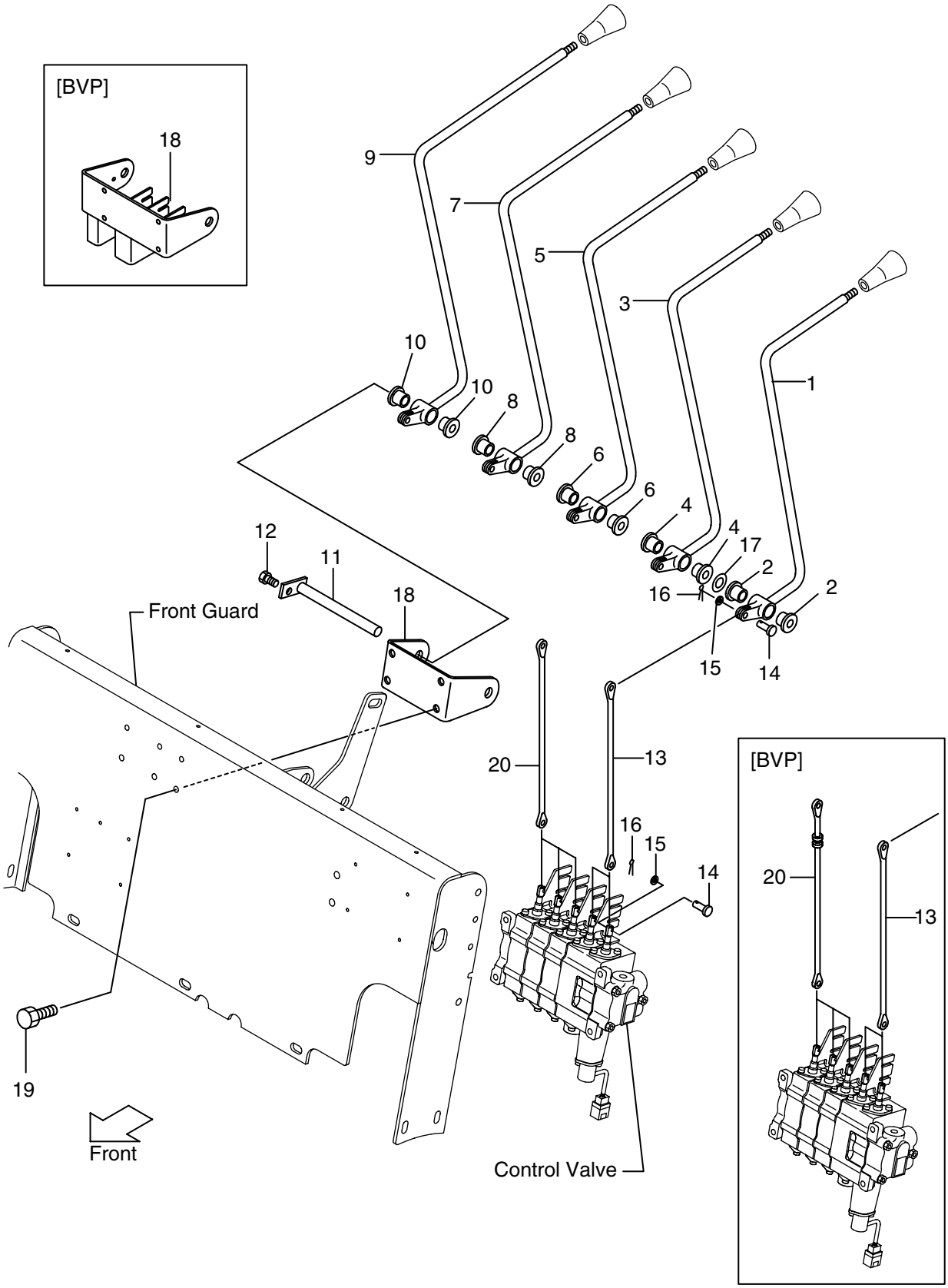

A: FB10-8 B: FB15-8 C: FB18-8

Item No.	Part No.	Mark	Description	Req'd	Remarks : serial No.
A1	216G7-40012		LEVER ASSY,LIFT	1	INC.1,2
1	NO PART NO.	#	LEVER	1	
2	214A7-42071		BUSHING	2	
A2	216G7-40022		LEVER ASSY,TILT	1	INC.3,4
3	NO PART NO.	#	LEVER	1	
4	214A7-42071		BUSHING	2	
A3	216G7-40032		LEVER ASSY,THIRD	1	INC.5,6
5	NO PART NO.	#	LEVER	1	
6	214A7-42071		BUSHING	2	
A4	216G7-40042		LEVER ASSY,FOURTH	1	INC.7,8
7	NO PART NO.	#	LEVER	1	
8	214A7-42071		BUSHING	2	
A5	234A7-40052		LEVER ASSY,FIFTH	1	INC.9,10
9	NO PART NO.	#	LEVER,FIFTH	1	
10	214A7-42071		BUSHING	2	
11	55593-02371		SHAFT	1	
-	55593-02371		SHAFT	1	5SV/BVP
-	529F3-70421		SHAFT	1	5SV/(FC,CS35,FCS35,FCS45)
-	529F3-70421		SHAFT	1	5SV/BVP/(FC,CS35,FCS35, FCS45)
12	01183-06012		BOLT	1	
13	23657-42081		JOINT	2	
14	22717-40061		PIN,CLEVIS	10	
15	02000-00005		WASHER	10	
16	02200-16010		PIN,COTTER	10	
17	22517-40051		SHIM	3	
18	234A7-42011		BRACKET	1	
-	581E7-42011		BRACKET	1	5SV/BVP, 5SV/BVP/(FC,CS35,FCS35, FCS45)
19	216H3-92281		BOLT	4	
20	23657-42081		JOINT	3	
-	581E7-42101		JOINT	3	5SV/BVP, 5SV/BVP/(FC,CS35,FCS35, FCS45)

FIG. 74 VALVE CONTROL KNOB
(BD0173G0) ﾊﾞﾙﾌﾞｺﾝﾄﾛｰﾙﾉﾌﾞ

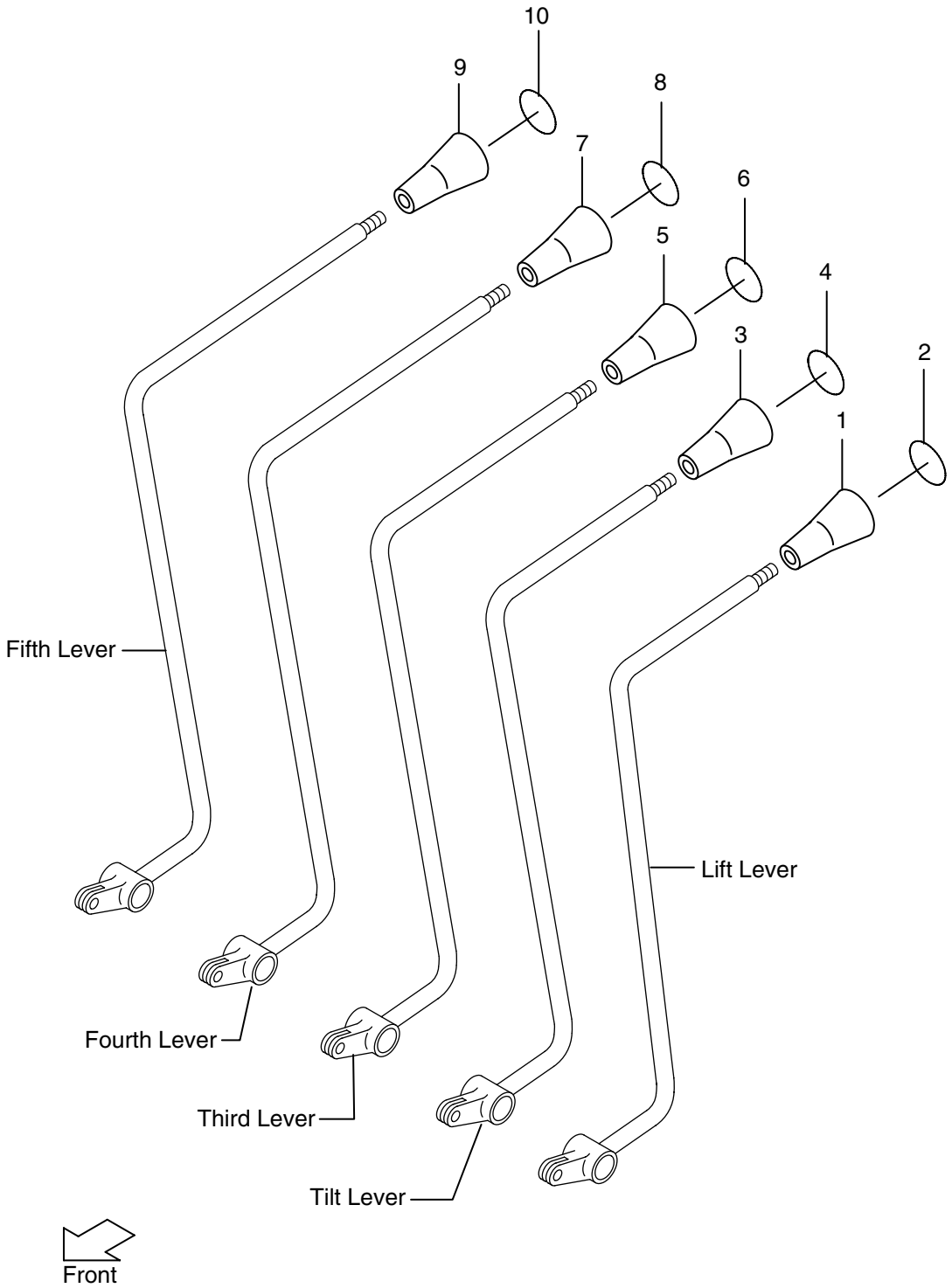

FIG. 74
(BD0173G0)

A: FB10-8 B: FB15-8 C: FB18-8

Item No.	Part No.	Mark	Description	Req'd	Remarks : serial No.
1	214A7-42181		KNOB,LIFT	1	
2	214A7-42191		DECAL,LIFT	1	
3	281E7-42101		KNOB,TILT	1	
4	214A7-42201		DECAL,TILT	1	
5	214A7-42181		KNOB,THIRD	1	3SV,4SV,5SV
6	514A2-72411		DECAL,SPACE	1	3SV,4SV,5SV
7	214A7-42181		KNOB,FOURTH	1	4SV,5SV
8	514A2-72411		DECAL,SPACE	1	4SV,5SV
9	214A7-42181		KNOB,FIFTH	1	5SV
10	514A2-72411		DECAL,SPACE	1	5SV

FIG. 75 OIL TANK
(BD017510) オイルタンク

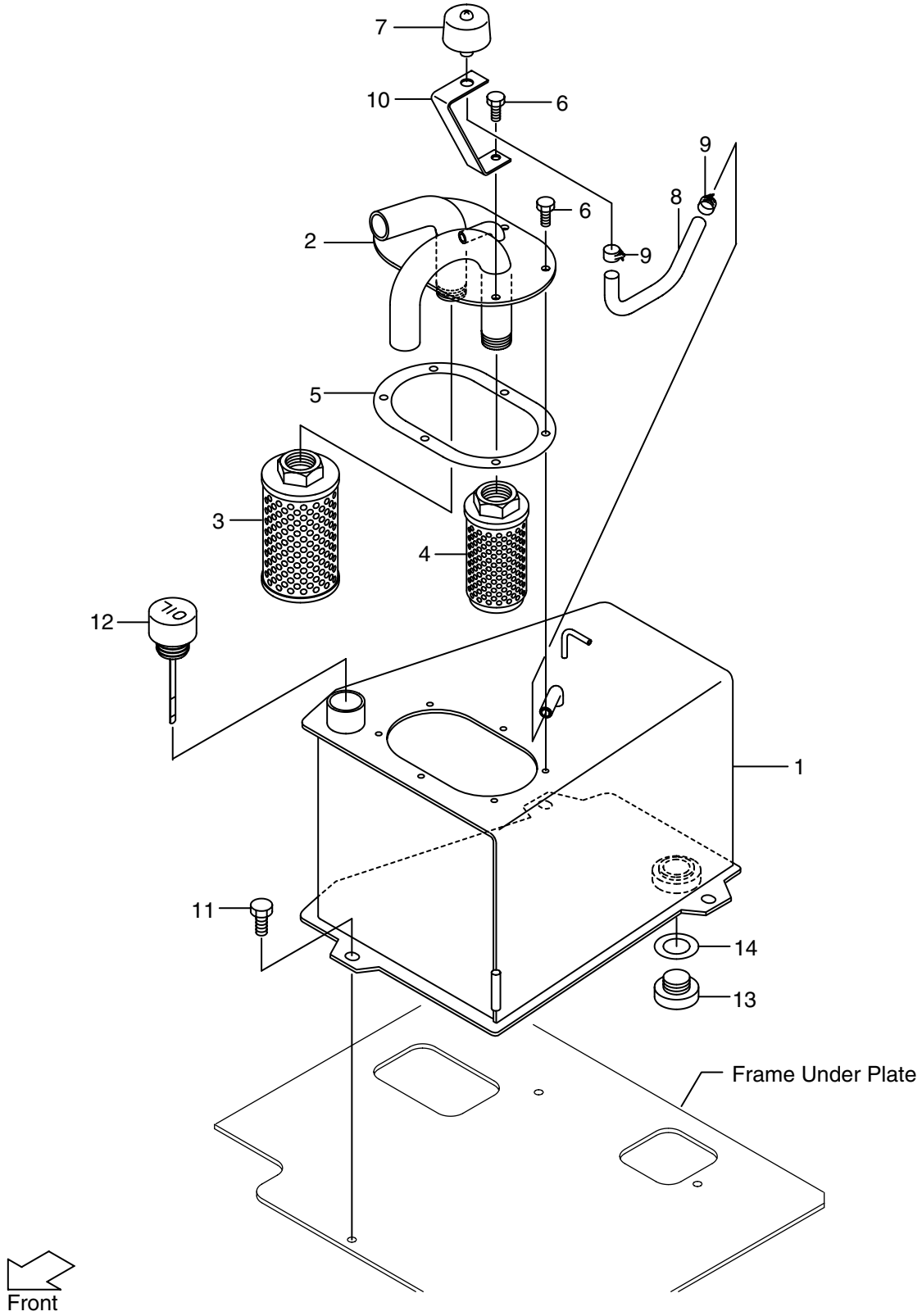

FIG. 75
(BD017510)

A: FB10-8 B: FB15-8 C: FB18-8

Item No.	Part No.	Mark	Description	Req'd	Remarks : serial No.
1	27P17-50251		TANK,OIL	1	
2	27P17-50351		PLATE,TOP	1	
-	57P13-70351		PLATE,TOP	1	FC,RTL,CS35,FCS35,FCS45
3	271A7-52301		FILTER,RETURN	1	
4	216G7-52051		FILTER,SUCTION	1	
5	277R7-52061		PACKING	1	
6	229F2-22151		BOLT	6	
7	216G7-52201		CAP,BREATHER	1	
8	04710-04028		HOSE	1	
9	04914-00019		CLIP	2	
10	27P17-52121		BRACKET	1	
11	01186-10016		BOLT	3	
12	27P17-52101		CAP,OIL	1	
13	21237-52051		PLUG,DRAIN	1	
14	21237-52062		PACKING	1	

FIG. 76 HYDRAULIC LINE (1/2)

(BD017610) ﾊｲﾄﾞﾛﾘｯｸﾗｲﾝ

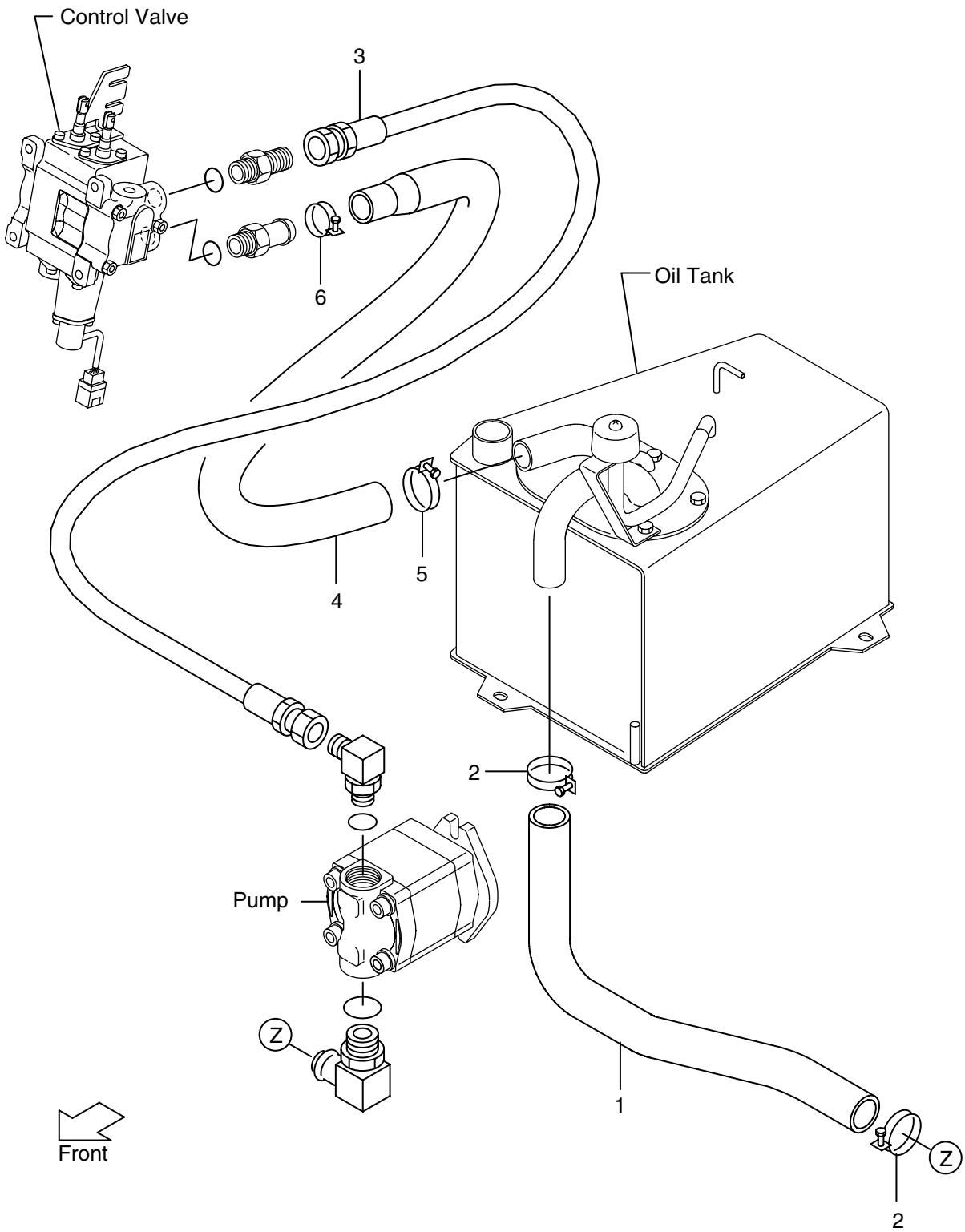

FIG. 76
(BD017610)

A: FB10-8 B: FB15-8 C: FB18-8

Item No.	Part No.	Mark	Description	Req'd	Remarks : serial No.
1	27P17-62001		HOSE,SUCTION	1	
2	217M2-12221		CLIP	2	
3	04601-44072		HOSE	1	
4	281E7-62251		HOSE,RETURN	1	
5	217M2-12221		CLIP	1	
6	217M2-12221		CLIP	1	
7	281E8-42002	+	HOSE	1	VMZZZ
8	23678-40095	+	TUBE,VINYL	1	VMZZZ
9	04911-00018	+	CLIP	1	VMZZZ
10	04914-00016	+	CLIP	1	VMZZZ

FIG. 77 HYDRAULIC LINE (2/2)

(BD017620) ﾊｲﾄﾞﾛﾘｯｸﾗｲﾝ

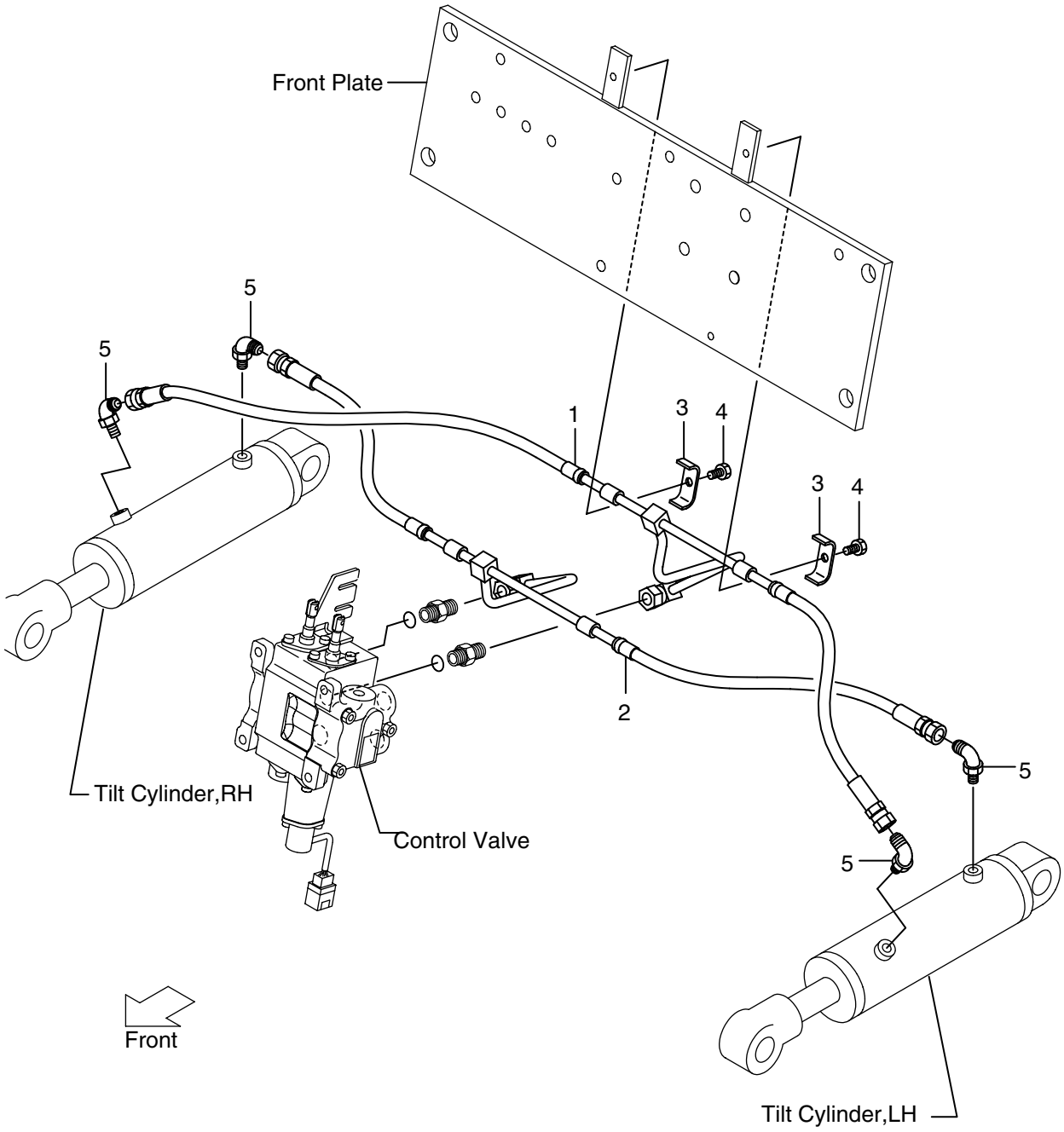

FIG. 77
(BD017620)

A: FB10-8 B: FB15-8 C: FB18-8

Item No.	Part No.	Mark	Description	Req'd	Remarks : serial No.
1	281E7-60201		PIPE,FRONT	1	
2	281E7-60211		PIPE,REAR	1	
3	281E7-62041		CLIP	2	
4	01183-08025		BOLT	2	
5	281E7-60401		ELBOW	4	

FIG. 78 TILT CYLINDER
(BD018510) ﾃｨﾙﾄｼﾘﾝﾀﾞ

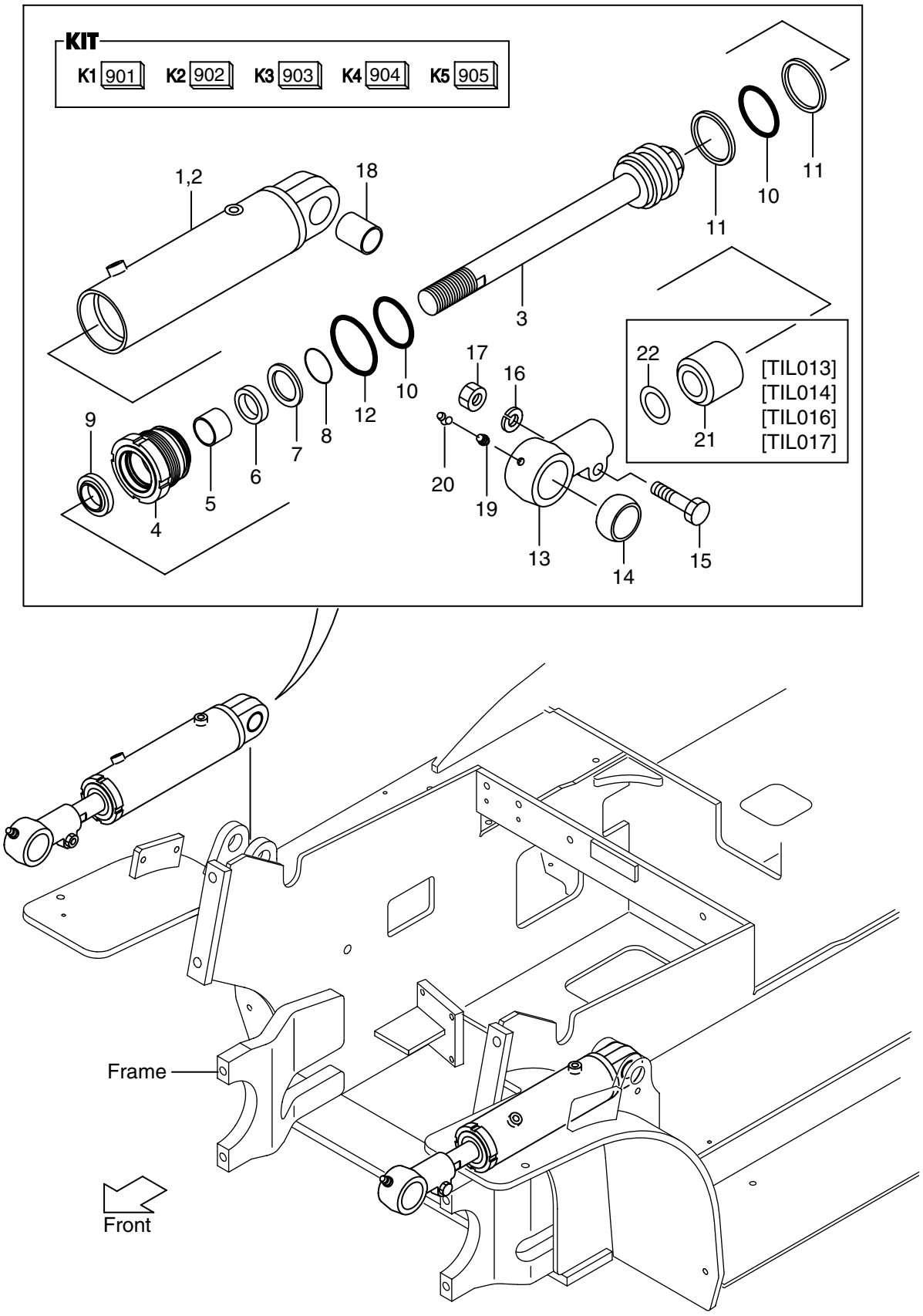

FIG. 78

(BD018510)

A: FB10-8 B: FB15-8 C: FB18-8

Item No.	Part No.	Mark	Description	Req'd	Remarks : serial No.
A1	281E8-50201		CYLINDER ASSY,TILT,RH	1	INC.1,3-19
A2	281E8-50211		CYLINDER ASSY,TILT,LH	1	INC.2-19
A3	281E8-52001		CYLINDER SUB ASSY,RH	1	INC.1,3-13,15-19
A4	281E8-52011		CYLINDER SUB ASSY,LH	1	INC.2-13,15-19
901	216G8-52501	K1	KIT,REPAIR	2	INC.6,9-12
902	281E8-52931	K2	KIT,ROD HEAD	2	INC.13,14
903	20A78-52941	K3	KIT,CYLINDER HEAD	2	INC.4,5
904	281E8-52901	K4	KIT,TUBE,RH	1	INC.1,18
905	281E8-52911	K5	KIT,TUBE,LH	1	INC.2,18
1	B-B6137-27001	*	BODY,CYLINDER,RH	1	
2	B-B6137-27101	*	BODY,CYLINDER,LH	1	
3	281E8-52801		ROD,PISTON	2	
4	B-30121-65065	*	HEAD,CYLINDER	2	
5	B-30131-03003	*	BUSHING	2	
6	B-30961-03012	*	U RING	2	
7	22N48-52811		SPACER	2	
8	22N48-52821		RING,SNAP	2	
9	B-30191-30025	*	RING,WIPER	2	
10	B-95112-05500	*	O RING	4	
11	B-95713-05500	*	RING,BACK UP	4	
12	B-95121-06500	*	O RING	2	
13	B-30101-30148	*	HEAD,ROD	2	
14	22N58-52701	*	BUSHING	2	
15	22N58-52831		BOLT	2	
16	22N58-52841		WASHER	2	
17	22N58-52851		NUT	2	
18	20A78-52831	*	BUSHING	2	
19	22N58-52861		FITTING	2	
20	22199-12401		CAP,NIPPLE	2	
21	281E8-52211		SPACER,L=108	2	TIL013
					(3-3 DEG.)
-	281E8-52201		SPACER,L=88	2	TIL014
					(3-6 DEG.)
-	281E8-52201		SPACER,L=88	2	TIL016
					(6-6 DEG.)
-	281E8-52221		SPACER,L=61	2	TIL017
					(6-10 DEG.)
22	23658-52101		SHIM,T-0.5	6	TIL013,TIL014
					(3-3,3-6 DEG.)
-	23658-52101		SHIM,T-0.5	6	TIL016,TIL017
					(6-6,6-10 DEG.)

FIG. 79 TILT CYLINDER [CS, FCS35, FCS45]

(BD018520) ﾃｨﾙﾄｼﾘﾝﾀﾞ

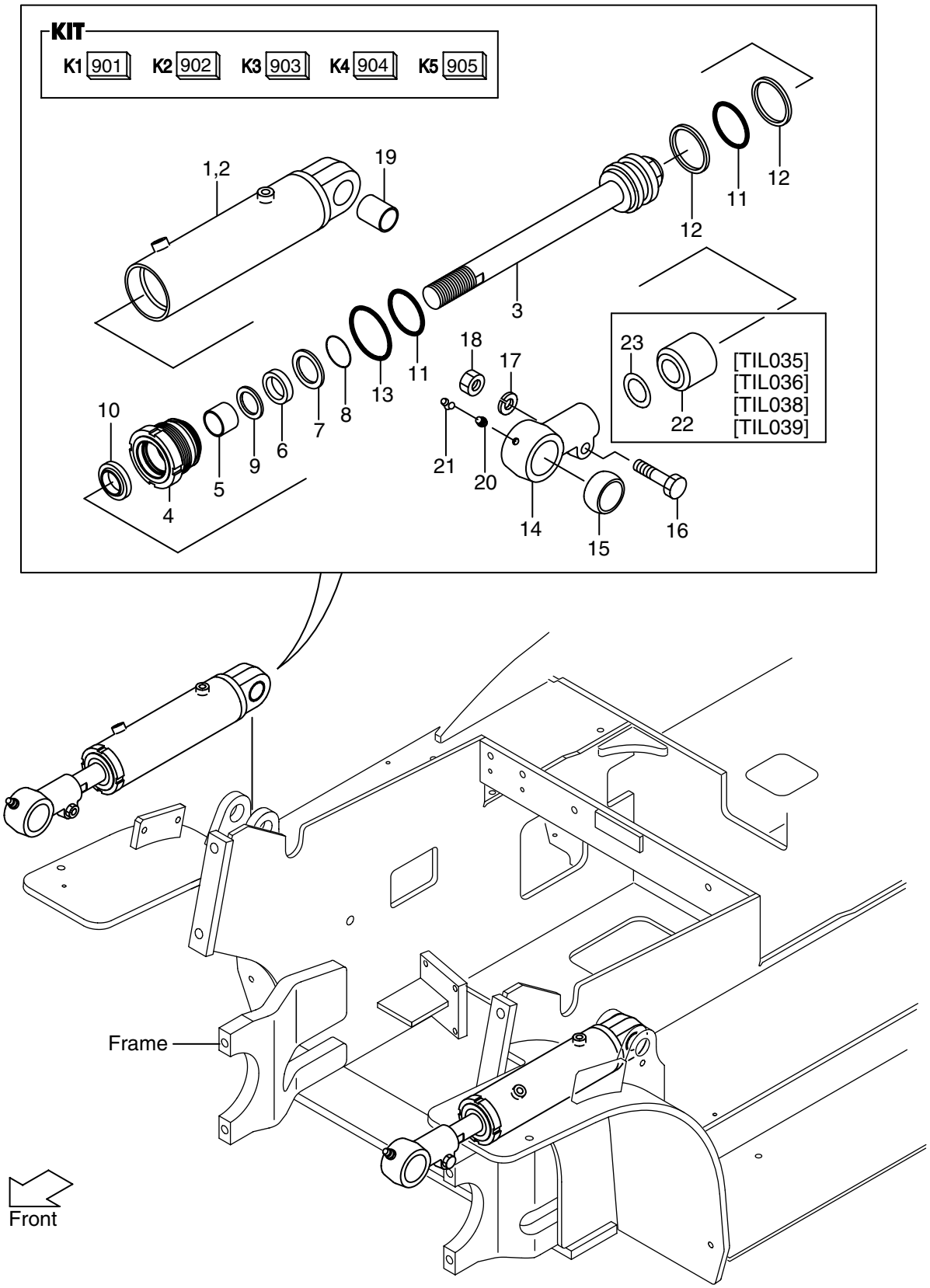

FIG. 79

(BD018520)

A: FB10-8 B: FB15-8 C: FB18-8

Item No.	Part No.	Mark	Description	Req'd	Remarks : serial No.
A1	581E5-51101		CYLINDER ASSY,TILT,RH	1	INC.1,3-20
A2	581E5-51111		CYLINDER ASSY,TILT,LH	1	INC.2-20
A3	581E5-52001		CYLINDER SUB ASSY,RH	1	INC.1,3-14,16-20
A4	581E5-52011		CYLINDER SUB ASSY,LH	1	INC.2-14,16-20
901	583R5-59851	K1	KIT,REPAIR	2	INC.6,9-13
902	281E8-52901	K2	KIT,TUBE,RH	1	INC.1,19
903	281E8-52911	K3	KIT,TUBE,LH	1	INC.2,19
904	281E8-52931	K4	KIT,ROD HEAD	2	INC.14,15
905	583R5-59861	K5	KIT,CYLINDER HEAD	2	INC.4,5
1	B-B6137-27001	*	BODY,CYLINDER,RH	1	
2	B-B6137-27101	*	BODY,CYLINDER,LH	1	
3	281E8-52801		ROD,PISTON	2	
4	B-B6121-65003	*	HEAD,CYLINDER	2	
5	B-30131-03003	*	BUSHING	2	
6	B-30161-30033	*	U RING	2	
7	583R5-52401		SPACER	2	
8	22N48-52821		RING,SNAP	2	
9	B-30461-40038	*	RING,BACK UP	2	
10	B-30191-30003	*	RING,WIPER	2	
11	B-30161-91489	*	O RING	4	
12	B-95713-05500	*	RING,BACK UP	4	
13	B-30161-91446	*	O RING	2	
14	B-30101-30148	*	HEAD,ROD	2	
15	22N58-52701	*	BUSHING	2	
16	22N58-52831		BOLT	2	
17	22N58-52841		WASHER	2	
18	22N58-52851		NUT	2	
19	20A78-52831	*	BUSHING	2	
20	22N58-52861		FITTING	2	
21	22199-12401		CAP,NIPPLE	2	
22	281E8-52211		SPACER,L=108	2	TIL035
					(3-3 DEG.)
-	281E8-52201		SPACER,L=88	2	TIL036
					(3-6 DEG.)
-	281E8-52201		SPACER,L=88	2	TIL038
					(6-6 DEG.)
-	281E8-52221		SPACER,L=61	2	TIL039
					(6-10 DEG.)
23	23658-52101		SHIM,T-0.5	6	TIL035,TIL036
					(3-3,3-6 DEG.)
-	23658-52101		SHIM,T-0.5	6	TIL038,TIL039
					(6-6,6-10 DEG.)

FIG. 80 TILT CYLINDER PIN
(BD018530) ﾃｨﾙﾄｼﾘﾝﾀﾞﾋﾟﾝ

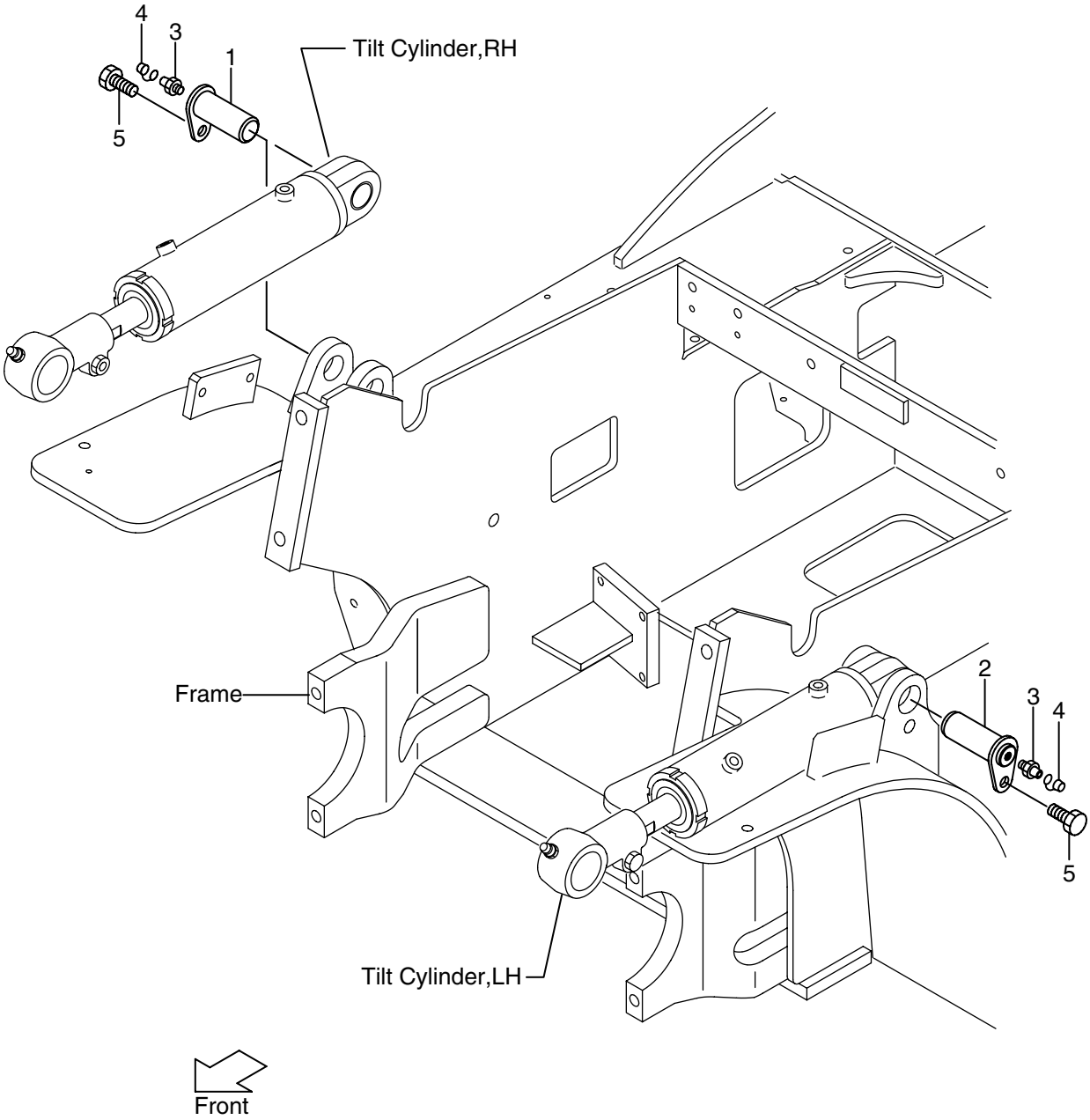

FIG. 80
(BD018530)

A: FB10-8 B: FB15-8 C: FB18-8

Item No.	Part No.	Mark	Description	Req'd	Remarks : serial No.
1	216G8-52201		PIN	1	
2	216G8-52201		PIN	1	
3	04901-00100		FITTING,GREASE	2	
4	22199-12401		CAP	2	
5	216G8-52301		BOLT	2	

FIG. 81 DECAL (1/2)

(BD019110) デカル

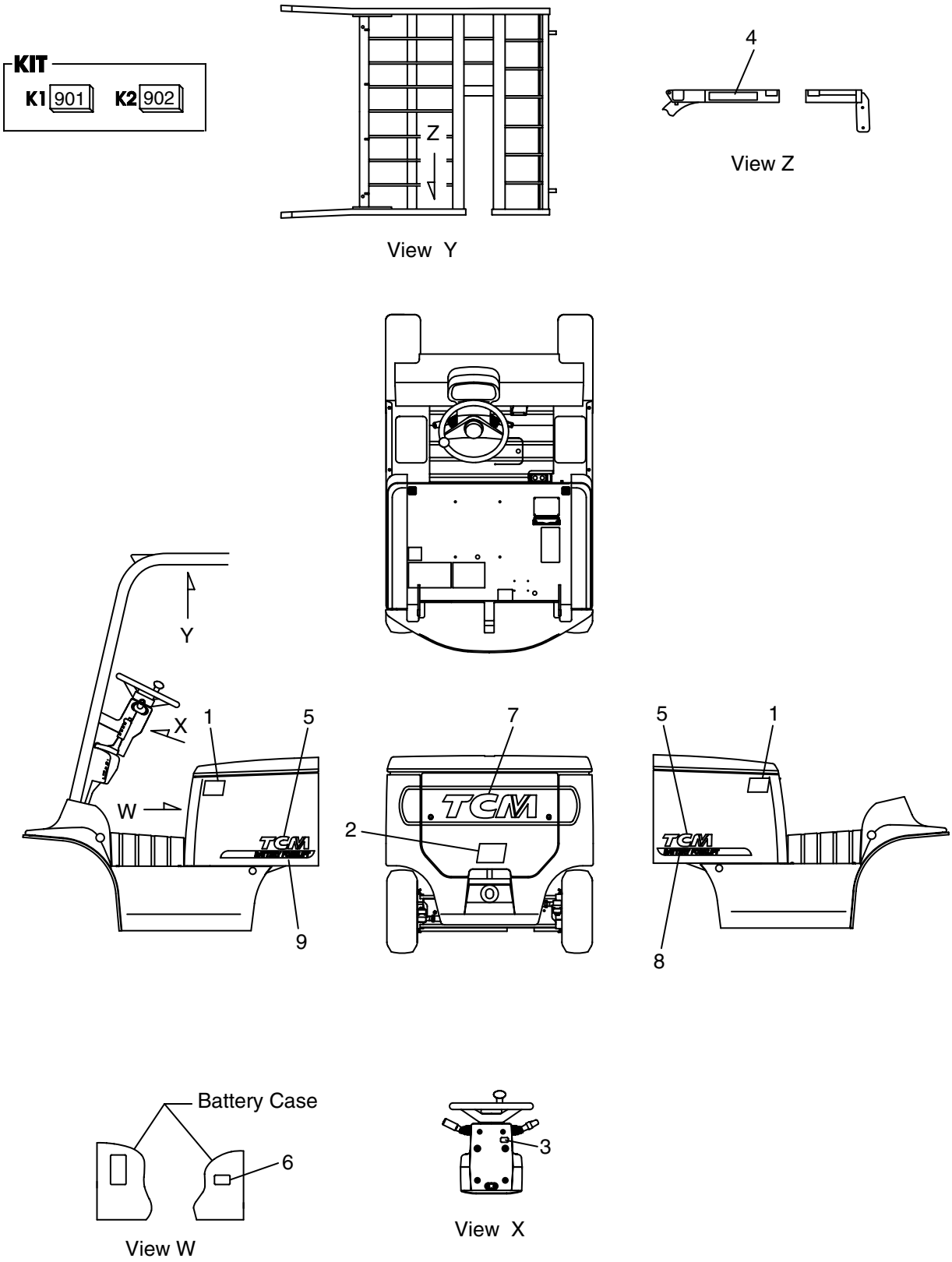

FIG. 81

(BD019110)

A: FB10-8 B: FB15-8 C: FB18-8

Item No.	Part No.	Mark	Description	Req'd	Remarks : serial No.
901	C-11452-7P1-D	K1	KIT,DECAL,JAPANESE	1	A,B INC.3-9 & etc.
-	C-11452-7P2-D	K1	KIT,DECAL,JAPANESE	1	C INC.3-9 & etc.
1	27P09-12001		DECAL,TRADE MARK(10)	2	A
-	27P19-12001		DECAL,TRADE MARK(15)	2	B
-	27P29-12001		DECAL,TRADE MARK(18)	2	C
2	27P09-12021		DECAL,TRADE MARK(10)	1	A
-	27P19-12021		DECAL,TRADE MARK(15)	1	B
-	27P29-12021		DECAL,TRADE MARK(18)	1	C
3	214A2-42141	*	DECAL,TURN SIGNAL	1	
4	230R9-12211	*	DECAL,WARNING	1	
5	256C9-12291	*	DECAL,TRADE MARK	2	
6	281E9-12151	*	DECAL,AIR PRESSURE	1	A,B
-	281H9-12101	*	DECAL,AIR PRESSURE	1	C
7	277H9-12111	*	DECAL, TRADE MARK WEIGHT	1	
8	27P19-12041	*	DECAL,BATTERY SIDE COVER RH	1	
9	27P19-12051	*	DECAL,BATTERY SIDE COVER LH	1	

FIG. 82 DECAL (2/2)
(BD019120) デカル

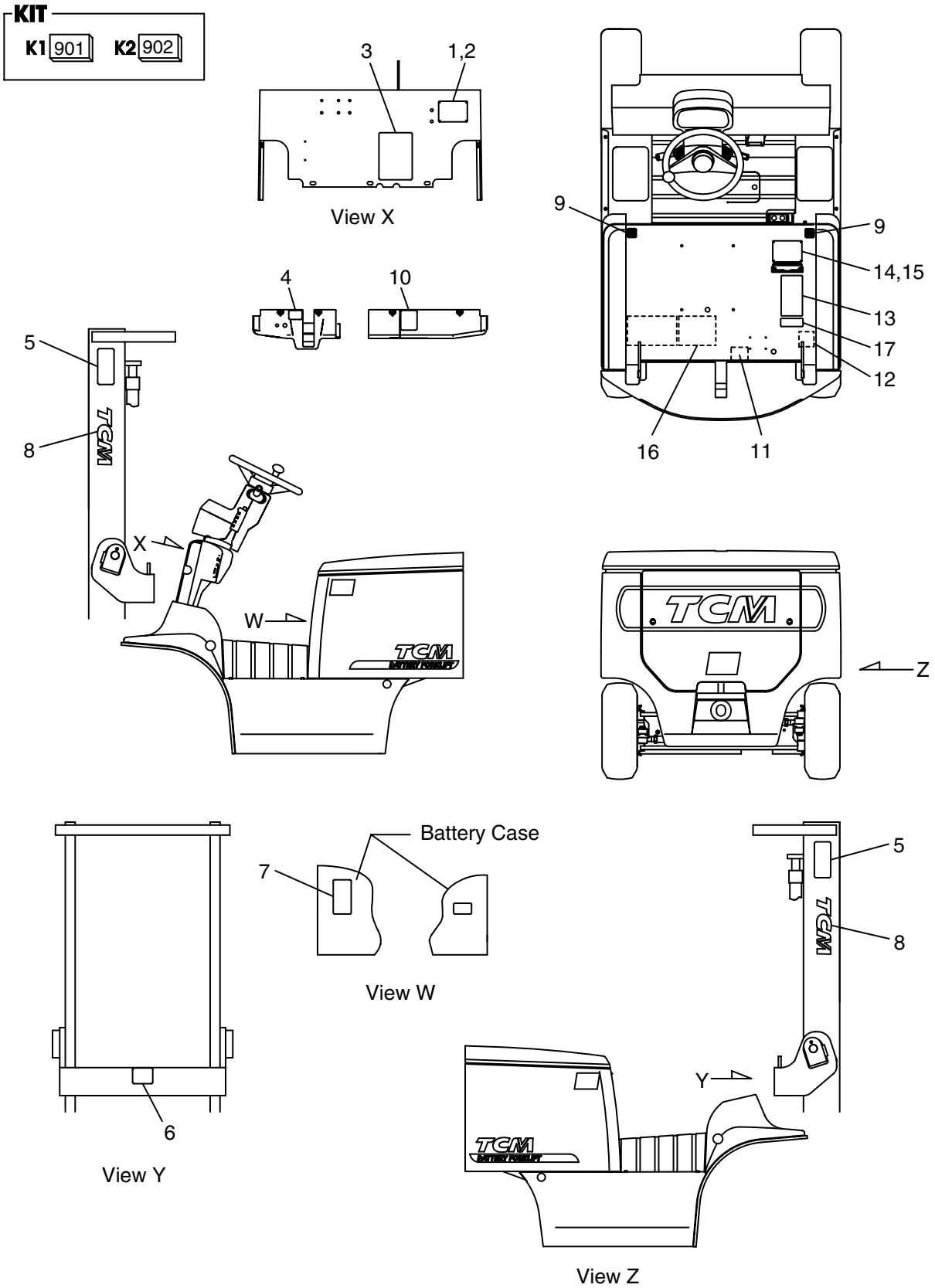

FIG. 82

(BD019120)

A: FB10-8 B: FB15-8 C: FB18-8

Item No.	Part No.	Mark	Description	Req'd	Remarks : serial No.
901	C-11452-7P1-D	K1	KIT,DECAL,JAPANESE	1	A,B INC.3-12 & etc.
-	C-11452-7P2-D	K1	KIT,DECAL,JAPANESE	1	C INC.3-12 & etc.
1	NO PART NO.	#	NAME PLATE	1	
2	22N59-12191		RIVET	4	
3	277H9-12131	*	DECAL, LUBRICATION CHART	1	
4	271A9-12202	*	DECAL,PARKING LEVER	1	
5	27419-12062	*	DECAL,CAUTION MAST	2	
6	27419-12072	*	DECAL,CAUTION	1	
7	216G9-12062	*	DECAL,CAUTION TIRE	1	
8	273A9-12242	*	DECAL,TRADE MARK	2	
9	22439-12031	*	DECAL	2	
10	271A9-12251	*	DECAL,CAUTION	1	
11	277H9-12101	*	DECAL,CAUTION	1	
12	277H9-12141	*	DECAL,CAUTION GAS SPRING	1	
13	239A9-12301	*	DECAL,WARNING PLATE	1	
14	27389-12031		PLATE,CAPACITY CHART VM300	1	A
-	27389-12061		PLATE,CAPACITY CHART VM550	1	A
-	27399-12051		PLATE,CAPACITY CHART VM300	1	B
-	27399-12091		PLATE,CAPACITY CHART VM550	1	B
-	21279-12001		PLATE,CAPACITY CHART VM300	1	C
-	21279-12011		PLATE,CAPACITY CHART VM550	1	C
15	02432-01008		RIVET	4	
16	27142-62742		LABEL,CAUTION,BAT.	1	
-	271A9-12601		LABEL,CAUTION,BAT.	1	
-	271A9-12611		LABEL,CAUTION,BAT.	1	
17	58E08-92001		DECAL,WARNING	1	RRL

FIG. 83 FORK [VM7P1,VM7P2]

(MD018110) フォーク

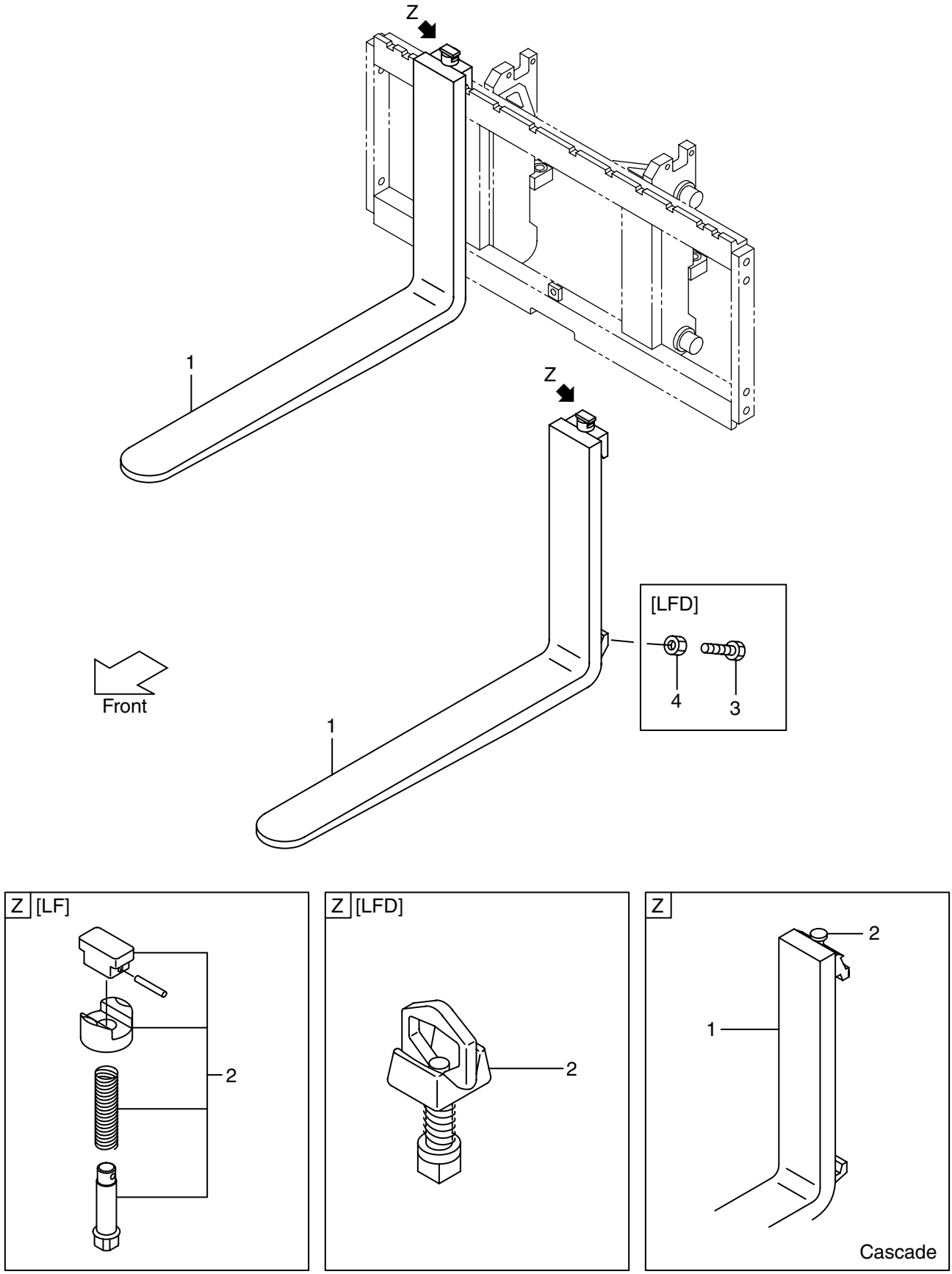

A: VM7P1 (FB10-8) B: VM7P1 (FB15-8) C: VM7P2 (FB18-8)

Item No.	Part No.	Mark	Description	Req'd	Remarks : serial No.
1	210B8-10502		FORK	2	A INC.2 L=770
-	210F8-10512		FORK	2	B,C INC.2 L=920
-	210B8-10502		FORK	2	A INC.2 LF077
-	210B8-10512		FORK	2	A INC.2 LF085
-	210F8-10502		FORK	2	B,C INC.2 LF085
-	210F8-10572		FORK	2	INC.2 LF090
-	210B8-10522		FORK	2	A INC.2 LF092
-	210F8-10512		FORK	2	B,C INC.2 LF092
-	210F8-10512		FORK	2	INC.2 EX L=920
-	210F8-10582		FORK	2	INC.2 LF100
-	210F8-10522		FORK	2	INC.2 LF107
-	210F8-10592		FORK	2	INC.2 LF110
-	210F8-10602		FORK	2	INC.2 LF120
-	210F8-10532		FORK	2	INC.2 LF122
-	210H8-10612		FORK	2	INC.2 LF130
-	210H8-10532		FORK	2	INC.2 LF137
-	210H8-10622		FORK	2	INC.2 LF140
-	210H8-10632		FORK	2	INC.2 LF150
-	210H8-10542		FORK	2	INC.2 LF152
-	210H8-10642		FORK	2	INC.2 LF160

A: VM7P1 (FB10-8) B: VM7P1 (FB15-8) C: VM7P2 (FB18-8)

Item No.	Part No.	Mark	Description	Req'd	Remarks : serial No.
1	210H8-10552		FORK	2	B,C INC.2 LF167
-	216B8-10301		FORK	2	A INC.2 LFD077
-	216B8-10311		FORK	2	A INC.2 LFD085
-	216G8-10301		FORK	2	B,C INC.2 LFD085
-	216G8-10371		FORK	2	INC.2 LFD090
-	216B8-10321		FORK	2	A INC.2 LFD092
-	216G8-10311		FORK	2	B,C INC.2 LFD092
-	216G8-10381		FORK	2	INC.2 LFD100
-	216G8-10321		FORK	2	INC.2 LFD107
-	216G8-10391		FORK	2	INC.2 LFD110
-	216G8-10401		FORK	2	INC.2 LFD120
-	216G8-10331		FORK	2	INC.2 LFD122
-	216G8-10411		FORK	2	INC.2 LFD130
-	216G8-10341		FORK	2	INC.2 LFD137
-	216G8-10421		FORK	2	INC.2 LFD140
-	216G8-10431		FORK	2	INC.2 LFD150
-	216G8-10351		FORK	2	INC.2 LFD152
-	216G8-10441		FORK	2	INC.2 LFD160
-	216G8-10361		FORK	2	B,C INC.2 LFD167
-	20A78-10601		FORK	2	B,C INC.2 CASCADE

A: VM7P1 (FB10-8) B: VM7P1 (FB15-8) C: VM7P2 (FB18-8)

Item No.	Part No.	Mark	Description	Req'd	Remarks : serial No.
1	20A78-10601		FORK	2	INC.2 EX, LF092 CASCADE
-	20A78-10611		FORK	2	INC.2 LF107 CASCADE
-	20A78-10621		FORK	2	INC.2 LF122 CASCADE
-	20A78-10631		FORK	2	INC.2 LF137 CASCADE
-	20A78-10641		FORK	2	INC.2 LF152 CASCADE
-	20A78-10651		FORK	2	B,C INC.2 LF167 CASCADE
2	216G8-12931		STOPPER	2	LF
-	214A8-11001		STOPPER	2	LFD
-	W-K2PK-M		STOPPER	2	CASCADE
3	216G8-12101		BOLT	4	LFD
4	01402-00010		NUT	4	LFD

FIG. 84 LIFT BRACKET [VM7P1,VM7P2]
(MD018210) ﾘﾌﾄﾌﾞﾗｹｯﾄ

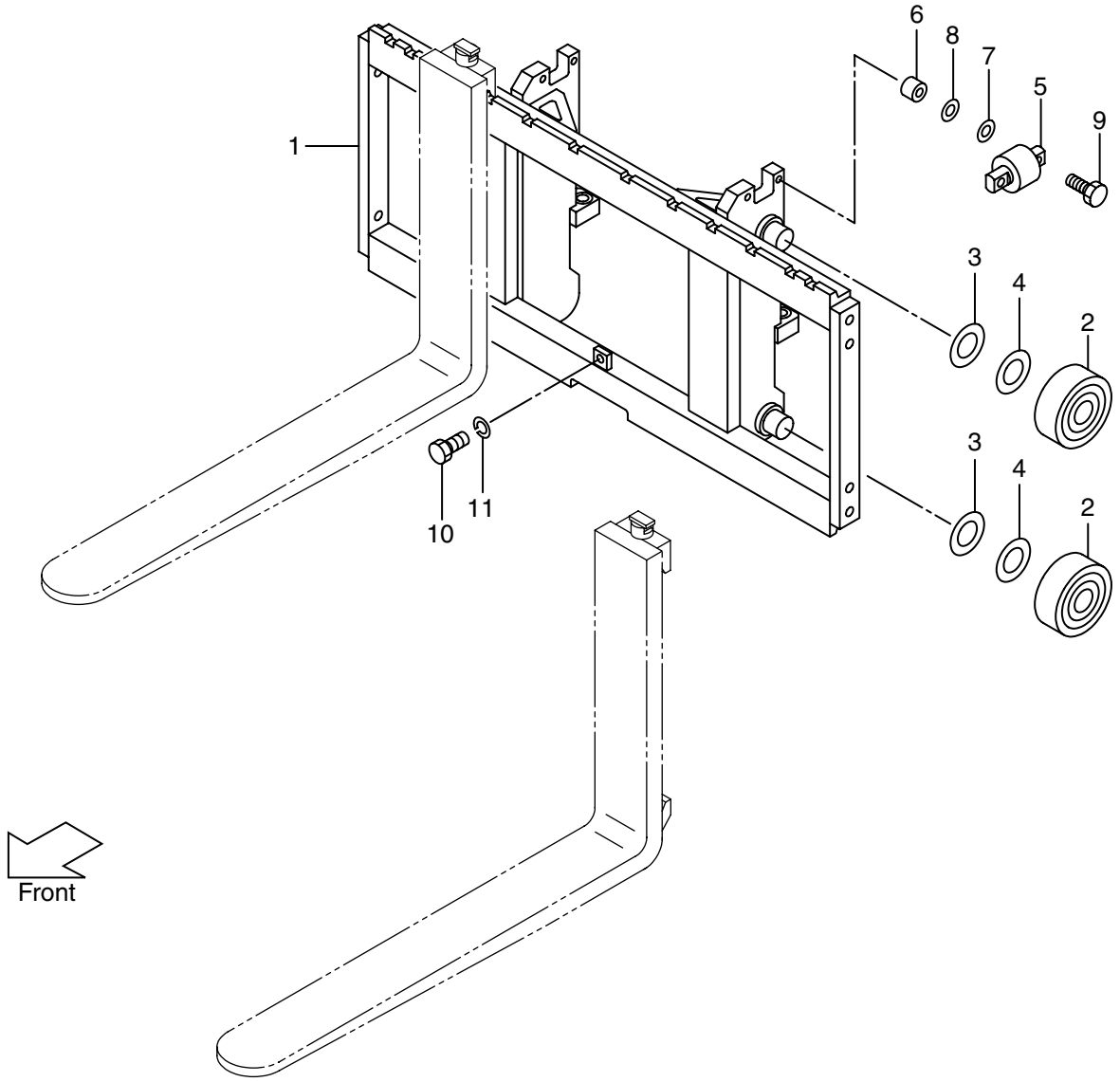

A: VM7P1 (FB10-8) B: VM7P1 (FB15-8) C: VM7P2 (FB18-8)

Item No.	Part No.	Mark	Description	Req'd	Remarks : serial No.
1	20A78-20201		BRACKET,LIFT	1	A,B
-	20A98-20201		BRACKET,LIFT	1	C
-	50A71-61001		BRACKET,LIFT	1	WF102,WF110,WF114,WF127
-	50A71-61011		BRACKET,LIFT	1	WF135,WF138,WF146, WF150,WF154
2	211F8-22201		ROLLER,END,102.0	4	
-	211F8-22211		ROLLER,END,102.5	4	
-	511F3-74021		ROLLER,END,102.0	4	FC,CSA,CS35,FCS35,FCS45, FCS55
-	511F3-74031		ROLLER,END,102.5	4	FC,CSA,CS35,FCS35,FCS45, FCS55
3	211F8-22261		SHIM,T-0.5	4	
4	211F8-22271		SHIM,T-1.0	8	
5	22018-30304		ROLLER,SIDE,41.0	2	
-	510F3-74002		ROLLER,SIDE,41.0	2	FC,CSA,CS35,FCS35,FCS45, FCS55
6	22578-32841		SPACER	4	
7	22018-30261		SHIM,T-0.2	8	
8	22018-30121		SHIM,T-1.0	4	
9	01103-10045		BOLT&WASHER	4	
10	01100-12020		BOLT	1	
11	02010-00012		WASHER	1	

FIG. 85 BACKREST [VM7P1,VM7P2]
(MD018220) ﾊﾞｯｸﾚｽﾄ

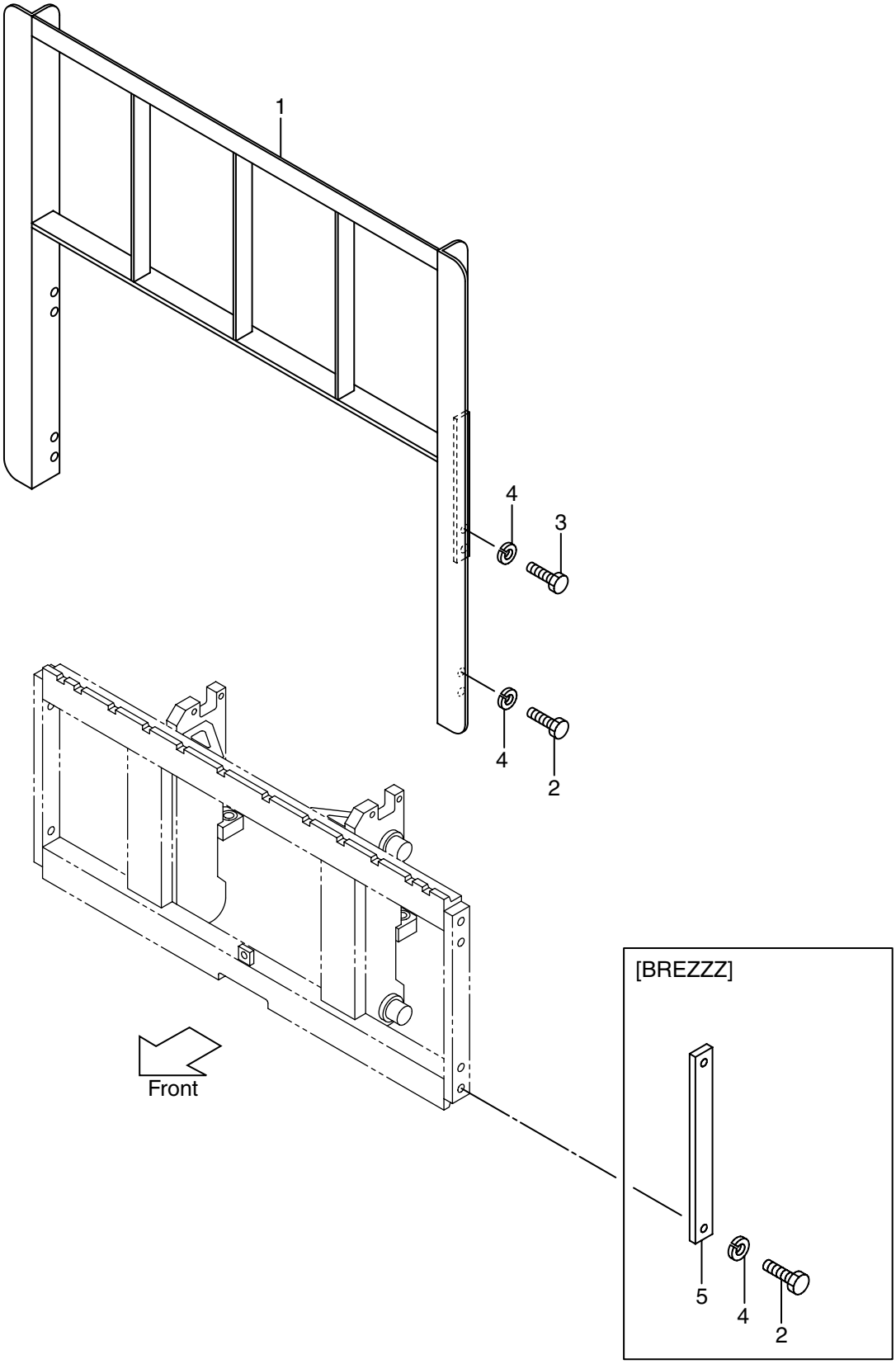

A: VM7P1 (FB10-8) B: VM7P1 (FB15-8) C: VM7P2 (FB18-8)

Item No.	Part No.	Mark	Description	Req'd	Remarks : serial No.
1	216G8-22201		BACKREST	1	
-	50A72-74301		BACKREST	1	EXA,EXE,EXN
-	516G2-74301		BACKREST	1	EXA,HBR048
-	216G8-22302		BACKREST	1	HBR110,EX4HBR
-	216G8-22312		BACKREST	1	HBR120,EX4HBR
-	216G8-22322		BACKREST	1	HBR130,EX4HBR
-	216G8-22332		BACKREST	1	HBR140,EX4HBR
-	216G8-22342		BACKREST	1	HBR150,EX4HBR
-	50A72-74101		BACKREST	1	WF110,EX2WF
-	516G2-74101		BACKREST	1	WF110/EXA
-	50A72-74101		BACKREST	1	WF110/EXC
-	50A72-74201		BACKREST	1	WF135,EX2WF
-	516G2-74201		BACKREST	1	WF135/EXA
-	50A72-74201		BACKREST	1	WF135/EXC
2	01100-14025		BOLT	4	
-	01100-14025		BOLT	4	HBR048,EXA,EXC,EXE,EXN, BREZZZ
-	01100-14030		BOLT	4	HBR110-150,EX4HBR
-	01100-14025		BOLT	4	WF110,WF135,EX2WF
-	01100-14025		BOLT	4	(WF110,WF135)/EXC, (WF110,WF135)/EXA
3	01100-14030		BOLT	4	
-	01100-14035		BOLT	4	HBR048,EXA, (WF110,WF135)/EXA
-	01100-14030		BOLT	4	EXC,EXE,EXN, (WF110,WF135)/EXC
-	01100-14030		BOLT	4	HBR110-150,EX4HBR
-	01100-14030		BOLT	4	WF110,WF135,EX2WF
4	02010-00014		WASHER	8	
-	02010-00014		WASHER	4	BREZZZ
5	23659-42161		PLATE	2	BREZZZ

FIG. 86 MAST [VM7P1,VM7P2]
(MD018310) マスト

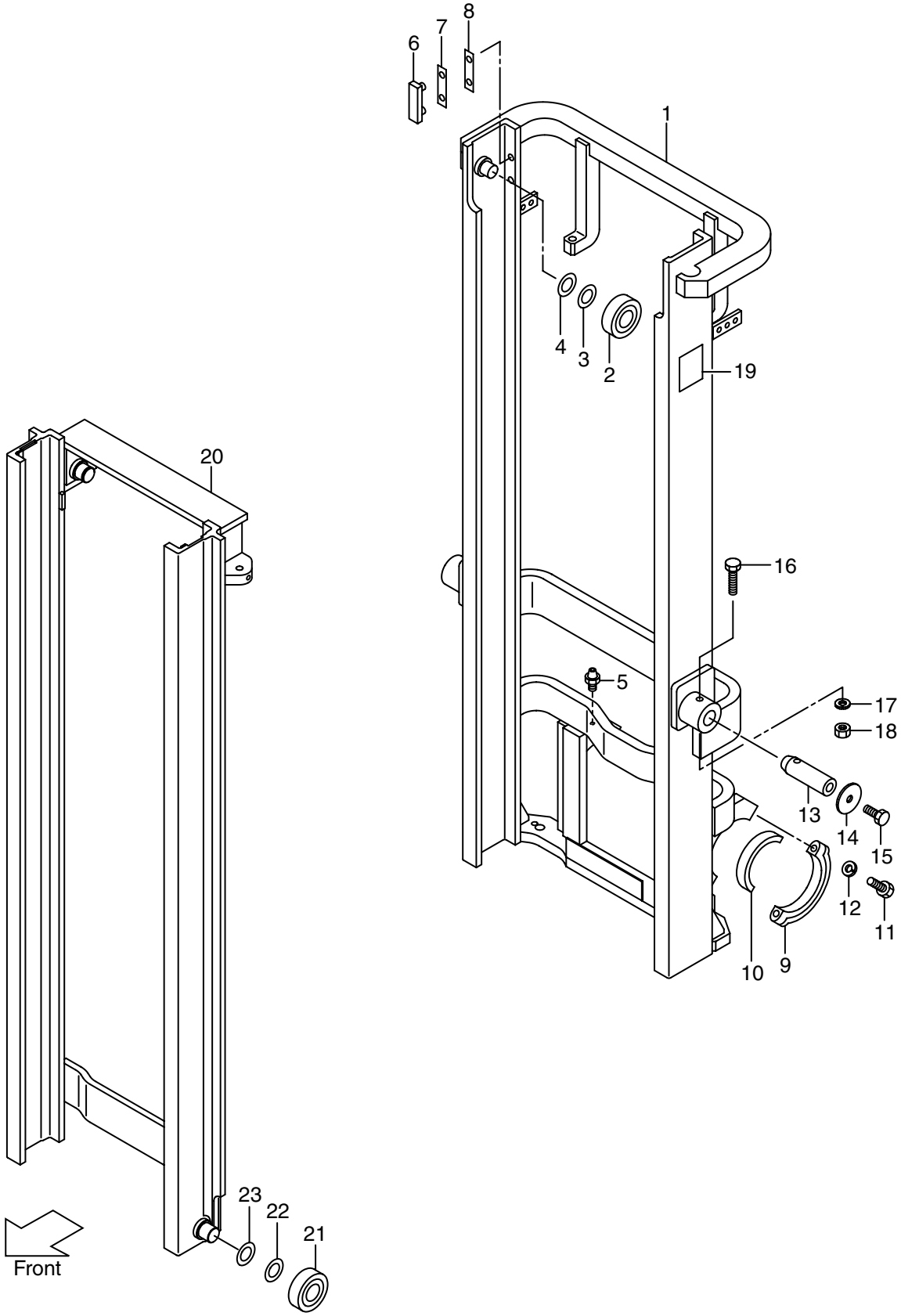

A: VM7P1 (FB10-8) B: VM7P1 (FB15-8) C: VM7P2 (FB18-8)

Item No.	Part No.	Mark	Description		Req'd	Remarks : serial No.
1	281E8-30211		MAST,OUTER	VM200	1	
-	281E8-30221		MAST,OUTER	VM225	1	
-	281E8-30231		MAST,OUTER	VM250	1	
-	281E8-30241		MAST,OUTER	VM270	1	
-	281E8-30251		MAST,OUTER	VM275	1	
-	281E8-30201		MAST,OUTER	VM300	1	
-	281E8-30261		MAST,OUTER	VM325	1	
-	281E8-30271		MAST,OUTER	VM330	1	
-	281E8-30281		MAST,OUTER	VM350	1	
-	281E8-30291		MAST,OUTER	VM366	1	
-	281E8-30301		MAST,OUTER	VM370	1	
-	281E8-30311		MAST,OUTER	VM375	1	
-	281E8-30321		MAST,OUTER	VM400	1	
-	281E8-30331		MAST,OUTER	VM425	1	
-	281E8-30341		MAST,OUTER	VM450	1	
-	281E8-30351		MAST,OUTER	VM475	1	
-	281E8-30361		MAST,OUTER	VM500	1	
-	281E8-30371		MAST,OUTER	VM550	1	
-	281E8-30381		MAST,OUTER	VM600	1	
2	211F8-22221		ROLLER,END,102.0		2	
-	211F8-22231		ROLLER,END,102.5		2	
-	511F3-74021		ROLLER,END,102.0		2	FC,CS35,CSA,FCS35,FCS45, FCS55,
-	511F3-74031		ROLLER,END,102.5		2	FC,CS35,CSA,FCS35,FCS45, FCS55,
3	211F8-22261		SHIM,T-0.5		4	
4	211F8-22271		SHIM,T-1.0		8	
5	04901-00100		FITTING		2	
6	216G8-33401		SLIPPER		2	
7	216G8-33361		SHIM,T-0.5		8	
8	216G8-33371		SHIM,T-1.0		4	
9	210F6-12441		CAP		2	
10	216G8-02001		BUSHING		2	
11	01103-14065		BOLT		4	
12	02010-00014		WASHER		4	
13	210F8-02102		PIN		2	
14	216G8-52311		WASHER		2	
15	216G4-12251		BOLT		2	
16	216G8-52321		BOLT		2	
17	02010-20012		WASHER		2	
18	234A8-42571		NUT		2	
19	NO PART NO.	#	NAME PLATE		1	
20	27P18-30411		MAST,INNER	VM200	1	
-	27P18-30421		MAST,INNER	VM225	1	
-	27P18-30431		MAST,INNER	VM250	1	
-	27P18-30441		MAST,INNER	VM270	1	
-	27P18-30451		MAST,INNER	VM275	1	
-	27P18-30461		MAST,INNER	VM300	1	
-	27P18-30471		MAST,INNER	VM325	1	
-	27P18-30481		MAST,INNER	VM330	1	

A: VM7P1 (FB10-8) B: VM7P1 (FB15-8) C: VM7P2 (FB18-8)

Item No.	Part No.	Mark	Description	Req'd	Remarks : serial No.
20	27P18-30491		MAST,INNER VM350	1	
-	27P18-30501		MAST,INNER VM366	1	
-	27P18-30511		MAST,INNER VM370	1	
-	27P18-30521		MAST,INNER VM375	1	
-	27P18-30531		MAST,INNER VM400	1	
-	27P18-30541		MAST,INNER VM425	1	
-	27P18-30551		MAST,INNER VM450	1	
-	27P18-30561		MAST,INNER VM475	1	
-	27P18-30571		MAST,INNER VM500	1	
-	27P18-30581		MAST,INNER VM550	1	
-	27P18-30591		MAST,INNER VM600	1	
21	211F8-22221		ROLLER,END,102.0	2	
-	211F8-22231		ROLLER,END,102.5	2	
-	511F3-74021		ROLLER,END,102.0	2	FC,CS35,FCS35,FCS45,FCS55
-	511F3-74031		ROLLER,END,102.5	2	FC,CS35,FCS35,FCS45,FCS55
22	211F8-22261		SHIM,T-0.5	4	
23	211F8-22271		SHIM,T-1.0	8	
24	211F8-22261	+	SHIM,T-0.5	8	
25	211F8-22271	+	SHIM,T-1.0	16	

MEMO

FIG. 87 TILT GAUGE [TG,PPC,PR,PRX] [VM7P1,VM7P2]
(MD018320) ﾃｨﾙﾄｹﾞｰｼﾞ

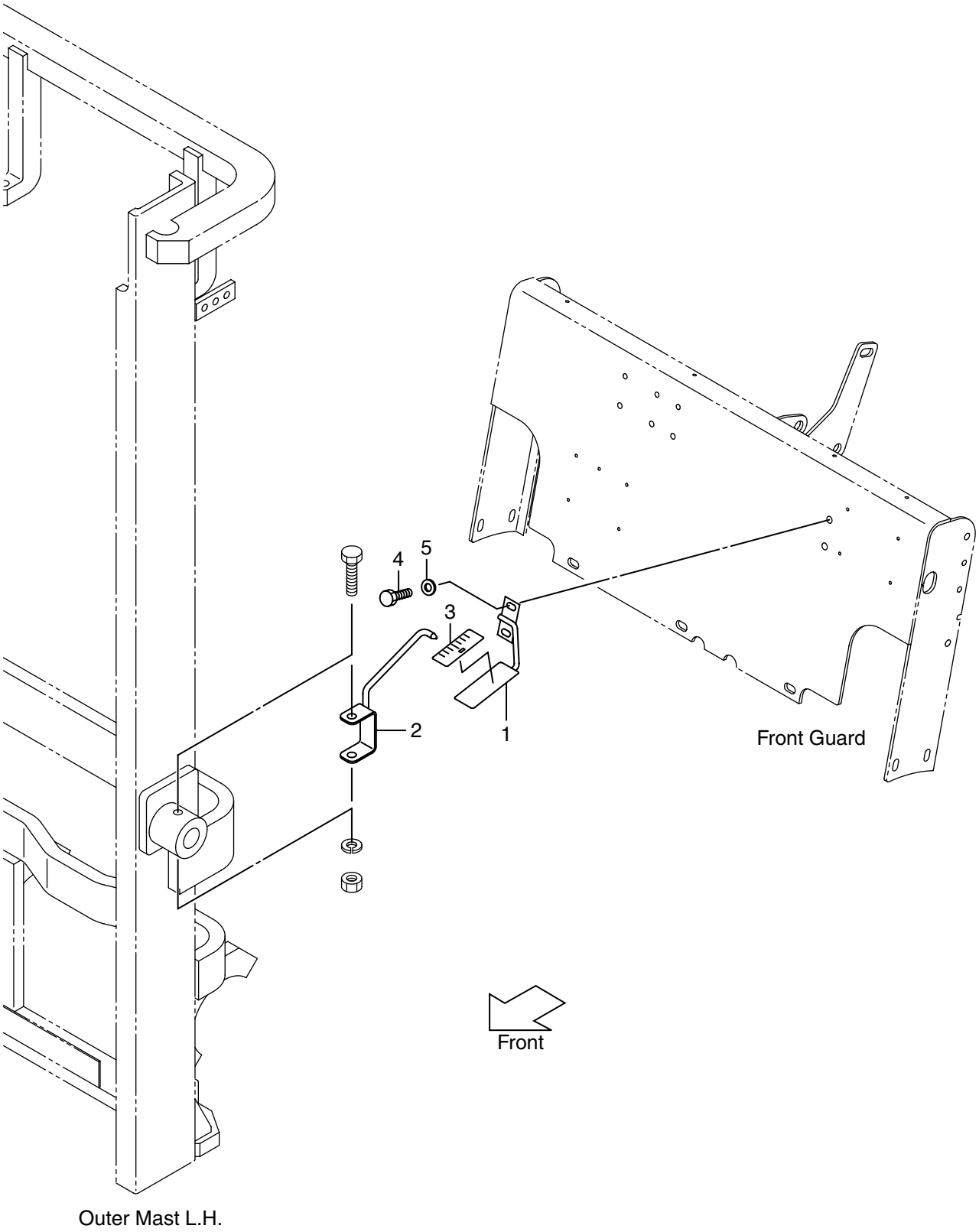

FIG. 87
(MD018320)

A: VM7P1 (FB10-8) B: VM7P1 (FB15-8) C: VM7P2 (FB18-8)

Item No.	Part No.	Mark	Description	Req'd	Remarks : serial No.
1	681N0-10011		GAUGE,TILT	1	
2	681E0-10051		INDICATOR	1	
3	62459-23371		SEAL	1	
4	278R8-43481		BOLT	2	
5	02000-20010		WASHER	2	

FIG. 88 LIFT CYLINDER [VM7P1,VM7P2]

(MD018410) リフトシリンダ

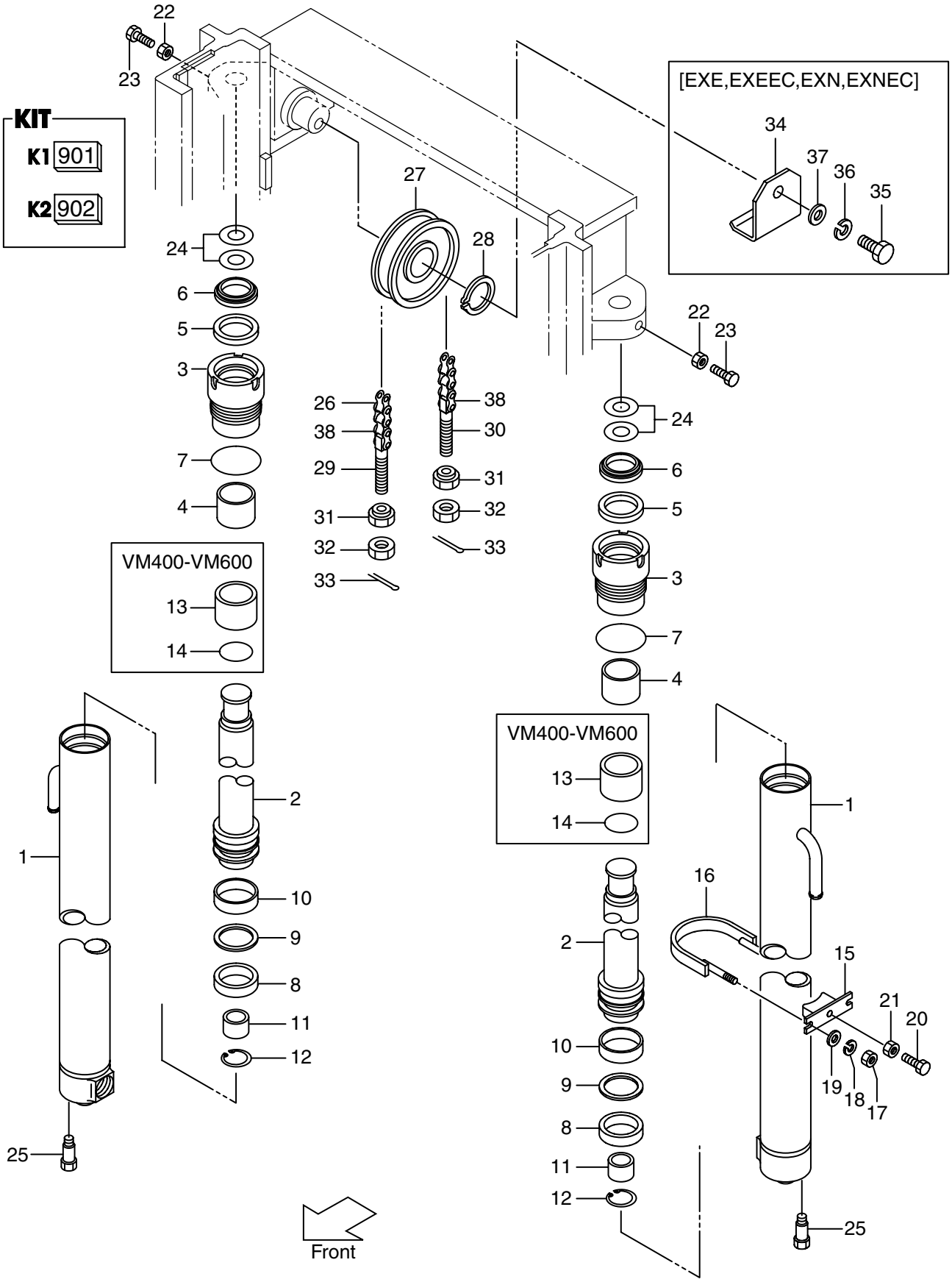

A: VM7P1 (FB10-8) B: VM7P1 (FB15-8) C: VM7P2 (FB18-8)

Item No.	Part No.	Mark	Description		Req'd	Remarks : serial No.
A1	20A78-40711		LIFT CYLINDER ASSY	VM200	2	INC.1-12
-	20A78-40721		LIFT CYLINDER ASSY	VM225	2	INC.1-12
-	20A78-40731		LIFT CYLINDER ASSY	VM250	2	INC.1-12
-	20A78-40741		LIFT CYLINDER ASSY	VM270	2	INC.1-12
-	20A78-40751		LIFT CYLINDER ASSY	VM275	2	INC.1-12
-	20A78-40701		LIFT CYLINDER ASSY	VM300	2	INC.1-12
-	20A78-40761		LIFT CYLINDER ASSY	VM325	2	INC.1-12
-	20A78-40771		LIFT CYLINDER ASSY	VM330	2	INC.1-12
-	20A78-40781		LIFT CYLINDER ASSY	VM350	2	INC.1-12
-	20A78-40791		LIFT CYLINDER ASSY	VM366	2	INC.1-12
-	20A78-40801		LIFT CYLINDER ASSY	VM370	2	INC.1-12
-	20A78-40811		LIFT CYLINDER ASSY	VM375	2	INC.1-12
-	20A78-40821		LIFT CYLINDER ASSY	VM400	2	INC.1-14
-	20A78-40831		LIFT CYLINDER ASSY	VM425	2	INC.1-14
-	20A78-40841		LIFT CYLINDER ASSY	VM450	2	INC.1-14
-	20A78-40851		LIFT CYLINDER ASSY	VM475	2	INC.1-14
-	20A78-40861		LIFT CYLINDER ASSY	VM500	2	INC.1-14
-	20A78-40871		LIFT CYLINDER ASSY	VM550	2	INC.1-14
-	20A78-40881		LIFT CYLINDER ASSY	VM600	2	INC.1-14
901	B-3045B-00026	K1	KIT,CAP		2	INC.3,4
902	B-3045A-00020	K2	KIT,REPAIR		2	INC.5-9
1	B-B6567-32601		TUBE	VM200	2	
-	B-B6567-32701		TUBE	VM225	2	
-	B-B6567-32801		TUBE	VM250	2	
-	B-B6567-32901		TUBE	VM270	2	
-	B-B6567-33001		TUBE	VM275	2	
-	B-B6567-33101		TUBE	VM300	2	
-	B-B6567-33201		TUBE	VM325	2	
-	B-B6567-33301		TUBE	VM330	2	
-	B-B6567-33401		TUBE	VM350	2	
-	B-B6567-33501		TUBE	VM366	2	
-	B-B6567-33601		TUBE	VM370	2	
-	B-B6567-33701		TUBE	VM375	2	
-	B-B6567-33801		TUBE	VM400	2	
-	B-B6567-33901		TUBE	VM425	2	
-	B-B6567-34001		TUBE	VM450	2	
-	B-B6567-34101		TUBE	VM475	2	
-	B-B6567-34201		TUBE	VM500	2	
-	B-B6567-34301		TUBE	VM550	2	
-	B-B6567-34401		TUBE	VM600	2	
2	B-B6577-08102		ROD,PISTON	VM200	2	
-	B-B6577-08202		ROD,PISTON	VM225	2	
-	B-B6577-08302		ROD,PISTON	VM250	2	
-	B-B6577-08402		ROD,PISTON	VM270	2	
-	B-B6577-08502		ROD,PISTON	VM275	2	
-	B-B6577-08602		ROD,PISTON	VM300	2	
-	B-B6577-08702		ROD,PISTON	VM325	2	
-	B-B6577-08802		ROD,PISTON	VM330	2	
-	B-B6577-08902		ROD,PISTON	VM350	2	
-	B-B6577-09002		ROD,PISTON	VM366	2	

A: VM7P1 (FB10-8) B: VM7P1 (FB15-8) C: VM7P2 (FB18-8)

Item No.	Part No.	Mark	Description		Req'd	Remarks : serial No.
2	B-B6577-09102		ROD,PISTON	VM370	2	
-	B-B6577-09202		ROD,PISTON	VM375	2	
-	B-B6577-09302		ROD,PISTON	VM400	2	
-	B-B6577-09402		ROD,PISTON	VM425	2	
-	B-B6577-09502		ROD,PISTON	VM450	2	
-	B-B6577-09602		ROD,PISTON	VM475	2	
-	B-B6577-09702		ROD,PISTON	VM500	2	
-	B-B6577-09802		ROD,PISTON	VM550	2	
-	B-B6577-09902		ROD,PISTON	VM600	2	
3	B-30121-45018	*	CAP		2	
4	B-30131-35017	*	BUSHING		2	
5	B-30961-03512	*	U RING		2	
6	B-30191-35025	*	RING,WIPER		2	
7	B-30161-91773	*	O RING		2	
8	B-30161-45046	*	U RING		2	
9	B-30461-45039	*	RING,BACK UP		2	
10	B-30131-45018		BUSHING		2	
11	B-B6551-91008		RING		2	
12	B-30141-91049		RING,SNAP		2	
13	B-B6111-35039		SPACER	VM400-500	2	
-	B-B6111-35049		SPACER	VM550,600	2	
14	B-95151-03500		O RING	VM400-600	2	
15	280B8-42031		SUPPORT		2	
16	280B8-42001		U BOLT		2	
17	278R0-63151		NUT		4	
18	02010-00008		WASHER		4	
19	02000-00008		WASHER		4	
20	01120-12040		BOLT		2	
21	01402-00012		NUT		2	
22	01402-00010		NUT		2	
23	01120-10030		BOLT		2	
24	20A78-43801		SHIM		4	t=0.2mm
-	20A78-43811		SHIM		4	
25	216G8-43151		BOLT		2	
26	218G8-45811		CHAIN,LEAF	VM200	2	INC.38
-	218G8-45891		CHAIN,LEAF	VM225	2	INC.38
-	218G8-45971		CHAIN,LEAF	VM250	2	INC.38
-	218G8-46031		CHAIN,LEAF	VM270	2	INC.38
-	218G8-46051		CHAIN,LEAF	VM275	2	INC.38
-	218G8-46131		CHAIN,LEAF	VM300	2	INC.38
-	218G8-46211		CHAIN,LEAF	VM325	2	INC.38
-	218G8-46211		CHAIN,LEAF	VM330	2	INC.38
-	218G8-46271		CHAIN,LEAF	VM350	2	INC.38
-	218G8-46331		CHAIN,LEAF	VM366	2	INC.38
-	218G8-46351		CHAIN,LEAF	VM370	2	INC.38
-	218G8-46351		CHAIN,LEAF	VM375	2	INC.38
-	218G8-46471		CHAIN,LEAF	VM400	2	INC.38
-	218G8-46551		CHAIN,LEAF	VM425	2	INC.38
-	218G8-46631		CHAIN,LEAF	VM450	2	INC.38
-	218G8-46711		CHAIN,LEAF	VM475	2	INC.38

A: VM7P1 (FB10-8) B: VM7P1 (FB15-8) C: VM7P2 (FB18-8)

Item No.	Part No.	Mark	Description		Req'd	Remarks : serial No.
26	218G8-46791		CHAIN,LEAF	VM500	2	INC.38
-	218G8-46971		CHAIN,LEAF	VM550	2	INC.38
-	218G8-47131		CHAIN,LEAF	VM600	2	INC.38
27	216G8-42031		SHEAVE		2	
28	02100-00035		RING,SNAP		2	
29	218G8-42501		PIN,ANCHOR		2	
30	218G8-42511		PIN,ANCHOR		2	
31	22118-40181		NUT		4	
32	01400-00014		NUT		4	
33	02200-03030		PIN,COTTER		4	
34	510F3-04021		COVER,CHAIN		2	EXE,EXEEC,EXN,EXNEC
35	01100-16016		BOLT		2	EXE,EXEEC,EXN,EXNEC
36	02010-00016		WASHER		2	EXE,EXEEC,EXN,EXNEC
37	02000-00016		WASHER		2	EXE,EXEEC,EXN,EXNEC
38	218G8-42701		CONNECTOR,LINK		4	

FIG. 89 LIFT CYLINDER [FCS45,FC,FCS35,FCS55] [VM7P1,VM7P2]
(MD018420) ﾘﾌﾄｼﾘﾝﾀﾞ

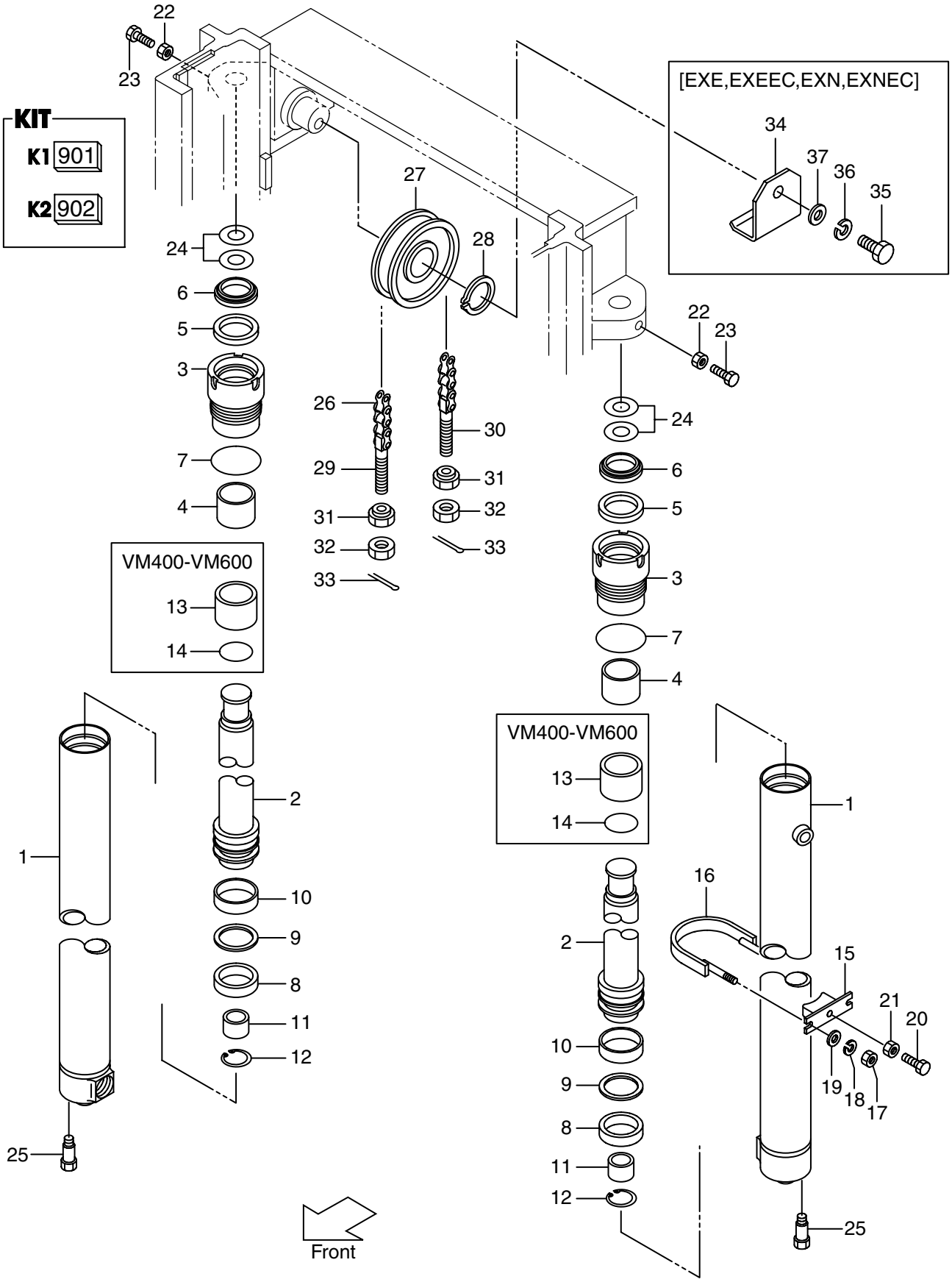

A: VM7P1 (FB10-8) B: VM7P1 (FB15-8) C: VM7P2 (FB18-8)

Item No.	Part No.	Mark	Description		Req'd	Remarks : serial No.
A1	581E5-51711		LIFT CYLINDER ASSY	VM200	2	INC.1-12
						FCS45
-	581E5-51721		LIFT CYLINDER ASSY	VM225	2	INC.1-12
						FCS45
-	581E5-51731		LIFT CYLINDER ASSY	VM250	2	INC.1-12
						FCS45
-	581E5-51741		LIFT CYLINDER ASSY	VM270	2	INC.1-12
						FCS45
-	581E5-51751		LIFT CYLINDER ASSY	VM275	2	INC.1-12
						FCS45
-	581E5-51701		LIFT CYLINDER ASSY	VM300	2	INC.1-12
						FCS45
-	581E5-51761		LIFT CYLINDER ASSY	VM325	2	INC.1-12
						FCS45
-	581E5-51771		LIFT CYLINDER ASSY	VM330	2	INC.1-12
						FCS45
-	581E5-51781		LIFT CYLINDER ASSY	VM350	2	INC.1-12
						FCS45
-	581E5-51791		LIFT CYLINDER ASSY	VM366	2	INC.1-12
						FCS45
-	581E5-51801		LIFT CYLINDER ASSY	VM370	2	INC.1-12
						FCS45
-	581E5-51811		LIFT CYLINDER ASSY	VM375	2	INC.1-12
						FCS45
-	581E5-51821		LIFT CYLINDER ASSY	VM400	2	INC.1-14
						FCS45
-	581E5-51831		LIFT CYLINDER ASSY	VM425	2	INC.1-14
						FCS45
-	581E5-51841		LIFT CYLINDER ASSY	VM450	2	INC.1-14
						FCS45
-	581E5-51851		LIFT CYLINDER ASSY	VM475	2	INC.1-14
						FCS45
-	581E5-51861		LIFT CYLINDER ASSY	VM500	2	INC.1-14
						FCS45
-	581E5-51871		LIFT CYLINDER ASSY	VM550	2	INC.1-14
						FCS45
-	581E5-51881		LIFT CYLINDER ASSY	VM600	2	INC.1-14
						FCS45
901	B-3045B-00026	K1	KIT,CAP		2	INC.3,4
902	B-3045A-00022	K2	KIT,REPAIR		2	INC.5-9
						FCS45
1	NO PART NO.		TUBE	VM200	2	FCS45
-	NO PART NO.		TUBE	VM225	2	FCS45
-	NO PART NO.		TUBE	VM250	2	FCS45
-	B-B6567-82601		TUBE	VM270	2	FCS45
-	NO PART NO.		TUBE	VM275	2	FCS45
-	B-B6567-82801		TUBE	VM300	2	FCS45
-	NO PART NO.		TUBE	VM325	2	FCS45
-	B-B6567-83001		TUBE	VM330	2	FCS45
-	NO PART NO.		TUBE	VM350	2	FCS45

A: VM7P1 (FB10-8) B: VM7P1 (FB15-8) C: VM7P2 (FB18-8)

Item No.	Part No.	Mark	Description		Req'd	Remarks : serial No.
1	NO PART NO.		TUBE	VM366	2	FCS45
-	NO PART NO.		TUBE	VM370	2	FCS45
-	NO PART NO.		TUBE	VM375	2	FCS45
-	NO PART NO.		TUBE	VM400	2	FCS45
-	NO PART NO.		TUBE	VM425	2	FCS45
-	B-B6567-83601		TUBE	VM450	2	FCS45
-	NO PART NO.		TUBE	VM475	2	FCS45
-	NO PART NO.		TUBE	VM500	2	FCS45
-	NO PART NO.		TUBE	VM550	2	FCS45
-	NO PART NO.		TUBE	VM600	2	FCS45
2	NO PART NO.		ROD,PISTON	VM200	2	FCS45
-	NO PART NO.		ROD,PISTON	VM225	2	FCS45
-	NO PART NO.		ROD,PISTON	VM250	2	FCS45
-	B-B6577-08402		ROD,PISTON	VM270	2	FCS45
-	NO PART NO.		ROD,PISTON	VM275	2	FCS45
-	B-B6577-08602		ROD,PISTON	VM300	2	FCS45
-	NO PART NO.		ROD,PISTON	VM325	2	FCS45
-	B-B6577-08802		ROD,PISTON	VM330	2	FCS45
-	NO PART NO.		ROD,PISTON	VM350	2	FCS45
-	NO PART NO.		ROD,PISTON	VM366	2	FCS45
-	NO PART NO.		ROD,PISTON	VM370	2	FCS45
-	NO PART NO.		ROD,PISTON	VM375	2	FCS45
-	NO PART NO.		ROD,PISTON	VM400	2	FCS45
-	NO PART NO.		ROD,PISTON	VM425	2	FCS45
-	B-B6577-09502		ROD,PISTON	VM450	2	FCS45
-	NO PART NO.		ROD,PISTON	VM475	2	FCS45
-	NO PART NO.		ROD,PISTON	VM500	2	FCS45
-	NO PART NO.		ROD,PISTON	VM550	2	FCS45
-	NO PART NO.		ROD,PISTON	VM600	2	FCS45
3	B-30121-45018	*	CAP		2	
4	B-30131-35017	*	BUSHING		2	
5	B-30161-35033	*	U RING		2	FCS45
6	B-30191-35031	*	RING,WIPER		2	FCS45
7	B-30161-91786	*	O RING		2	FCS45
8	B-30161-45046	*	U RING		2	
9	B-30461-45039	*	RING,BACK UP		2	
10	B-30131-45018		BUSHING		2	
11	B-B6551-91008		RING		2	
12	B-30141-91049		RING,SNAP		2	
13	B-B6111-35039		SPACER	VM400-500	2	
-	B-B6111-35049		SPACER	VM550,600	2	
14	B-95151-03500		O RING	VM400-600	2	
15	280B8-42031		SUPPORT		2	
16	280B8-42001		U BOLT		2	
17	278R0-63151		NUT		4	
18	02010-00008		WASHER		4	
19	02000-00008		WASHER		4	
20	01120-12040		BOLT		2	
21	01402-00012		NUT		2	
22	01402-00010		NUT		2	

A: VM7P1 (FB10-8) B: VM7P1 (FB15-8) C: VM7P2 (FB18-8)

Item No.	Part No.	Mark	Description		Req'd	Remarks : serial No.
23	01120-10030		BOLT		2	
24	20A78-43801		SHIM		4	t=0.2mm
-	20A78-43811		SHIM		4	
25	216G8-43151		BOLT		2	
26	09001-08051		CHAIN,LEAF	VM200	2	FC,FCS35,FCS45,FCS55
-	09001-08055		CHAIN,LEAF	VM225	2	FC,FCS35,FCS45,FCS55
-	09001-08061		CHAIN,LEAF	VM250	2	FC,FCS35,FCS45,FCS55
-	09001-08065		CHAIN,LEAF	VM270	2	FC,FCS35,FCS45,FCS55
-	09001-08065		CHAIN,LEAF	VM275	2	FC,FCS35,FCS45,FCS55
-	09001-08071		CHAIN,LEAF	VM300	2	FC,FCS35,FCS45,FCS55
-	09001-08075		CHAIN,LEAF	VM325	2	FC,FCS35,FCS45,FCS55
-	09001-08077		CHAIN,LEAF	VM330	2	FC,FCS35,FCS45,FCS55
-	09001-08081		CHAIN,LEAF	VM350	2	FC,FCS35,FCS45,FCS55
-	09001-08083		CHAIN,LEAF	VM366	2	FC,FCS35,FCS45,FCS55
-	09001-08085		CHAIN,LEAF	VM370	2	FC,FCS35,FCS45,FCS55
-	09001-08085		CHAIN,LEAF	VM375	2	FC,FCS35,FCS45,FCS55
-	09001-08093		CHAIN,LEAF	VM400	2	FC,FCS35,FCS45,FCS55
-	09001-08097		CHAIN,LEAF	VM425	2	FC,FCS35,FCS45,FCS55
-	09001-08103		CHAIN,LEAF	VM450	2	FC,FCS35,FCS45,FCS55
-	09001-08107		CHAIN,LEAF	VM475	2	FC,FCS35,FCS45,FCS55
-	09001-08113		CHAIN,LEAF	VM500	2	FC,FCS35,FCS45,FCS55
-	09001-08123		CHAIN,LEAF	VM550	2	FC,FCS35,FCS45,FCS55
-	09001-08133		CHAIN,LEAF	VM600	2	FC,FCS35,FCS45,FCS55
27	516G3-74001		SHEAVE		2	FC,FCS35,FCS45,FCS55
28	02100-00035		RING,SNAP		2	
29	510F5-54051		PIN,ANCHOR		2	FC,FCS35,FCS45,FCS55
30	510F5-54061		PIN,ANCHOR		2	FC,FCS35,FCS45,FCS55
31	22118-40181		NUT		4	
32	01400-00014		NUT		4	
33	02200-03030		PIN,COTTER		4	
34	510F3-04021		COVER,CHAIN		2	EXE,EXEEC,EXN,EXNEC
35	01100-16016		BOLT		2	EXE,EXEEC,EXN,EXNEC
36	02010-00016		WASHER		2	EXE,EXEEC,EXN,EXNEC
37	02000-00016		WASHER		2	EXE,EXEEC,EXN,EXNEC

FIG. 90 MAST PIPING [VM7P1,VM7P2]

(MD018430) ﾏｽﾄﾊﾟｲﾋﾟﾝｸﾞ

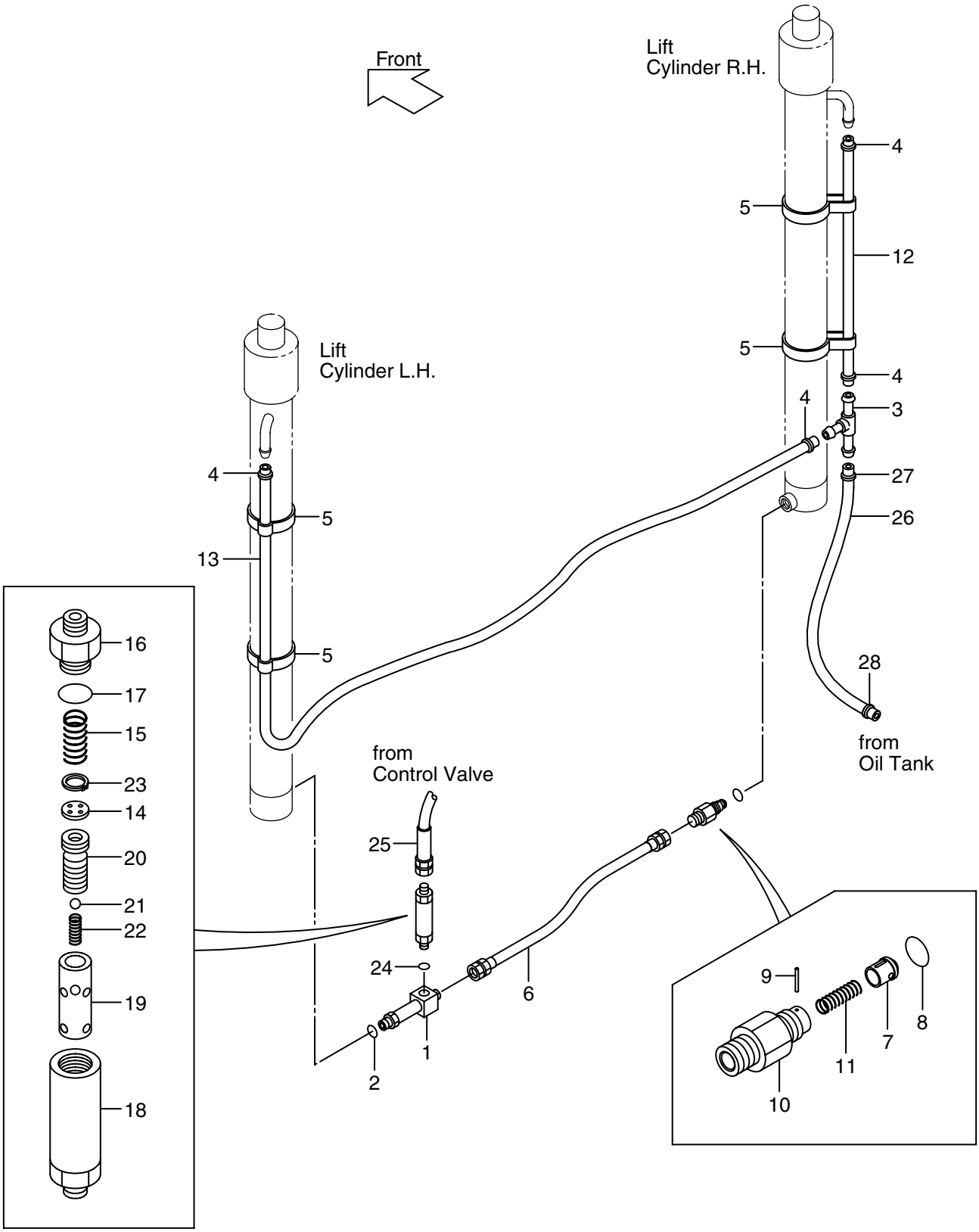

A: VM7P1 (FB10-8) B: VM7P1 (FB15-8) C: VM7P2 (FB18-8)

Item No.	Part No.	Mark	Description		Req'd	Remarks : serial No.
A1	234A8-41101		THREE WAY ASSY		1	INC.1,2
1	NO PART NO.	#	THREE WAY		1	
2	03320-00140		O RING		1	
3	23679-45051		THREE WAY		1	
4	04911-00018		CLIP		4	
5	22N58-45001		BAND		4	
6	277N8-42001		HOSE		1	
A2	216G0-93201		VALVE ASSY,CUT		1	INC.7-11
7	NO PART NO.	#	PISTON		1	
8	03320-00140		O RING		1	
9	02270-01014		PIN,SPRING		1	
10	NO PART NO.	#	FITTING		1	
11	234A8-42611		SPRING		1	
12	23678-40075		HOSE	VM200	1	
-	23678-40085		HOSE	VM225	1	
-	23678-40100		HOSE	VM250	1	
-	23678-40110		HOSE	VM270	1	
-	23678-40110		HOSE	VM275	1	
-	23678-40125		HOSE	VM300	1	
-	23678-40135		HOSE	VM325	1	
-	23678-40140		HOSE	VM330	1	
-	23678-40150		HOSE	VM350	1	
-	23678-40160		HOSE	VM366	1	
-	23678-40160		HOSE	VM370	1	
-	23678-40160		HOSE	VM375	1	
-	23678-40180		HOSE	VM400	1	
-	23678-40190		HOSE	VM425	1	
-	23678-40205		HOSE	VM450	1	
-	23678-40215		HOSE	VM475	1	
-	23678-40230		HOSE	VM500	1	
-	23678-40260		HOSE	VM550	1	
-	23678-40285		HOSE	VM600	1	
13	23678-40130		HOSE	VM200	1	
-	23678-40140		HOSE	VM225	1	
-	23678-40155		HOSE	VM250	1	
-	23678-40165		HOSE	VM270	1	
-	23678-40165		HOSE	VM275	1	
-	23678-40175		HOSE	VM300	1	
-	23678-40190		HOSE	VM325	1	
-	23678-40195		HOSE	VM330	1	
-	23678-40205		HOSE	VM350	1	
-	23678-40215		HOSE	VM366	1	
-	23678-40215		HOSE	VM370	1	
-	23678-40215		HOSE	VM375	1	
-	23678-40235		HOSE	VM400	1	
-	23678-40245		HOSE	VM425	1	
-	23678-40260		HOSE	VM450	1	
-	23678-40270		HOSE	VM475	1	
-	23678-40285		HOSE	VM500	1	
-	23678-40315		HOSE	VM550	1	

A: VM7P1 (FB10-8) B: VM7P1 (FB15-8) C: VM7P2 (FB18-8)

Item No.	Part No.	Mark	Description	Req'd	Remarks : serial No.
13	23678-40340		HOSE VM600	1	
A3	216G8-41001		REGULATOR ASSY	1	INC.14-23
14	NO PART NO.	#	PLATE	1	
15	27979-43101		SPRING	1	
16	NO PART NO.	#	FITTING	1	
17	03300-00280		O RING	1	
18	NO PART NO.	#	CASE	1	
19	NO PART NO.	#	SLEEVE	1	
20	NO PART NO.	#	PISTON	1	
21	24459-42951		BALL,NYLON	1	
22	214A8-44151		SPRING	1	
23	02110-00018		RING,SNAP	1	
24	03320-00180		O RING	1	
25	281E8-42002		HOSE	1	
-	581E6-A2111		HOSE	1	LM
26	23678-40110		HOSE	1	
-	23678-40110		HOSE	1	LM
27	04911-00018		CLIP	1	
-	04911-00018		CLIP	1	LM
28	04914-00016		CLIP,TANK SIDE	1	
-	04914-00016		CLIP,TANK SIDE	1	LM

MEMO

FIG. 91 MAST PIPING [FC,RTL,CSA,CS35,FCS35,FCS45,FCS55]
(MD018440) [VM7P1,VM7P2]
ﾏｽﾄﾊﾟｲﾋﾟﾝｸﾞ

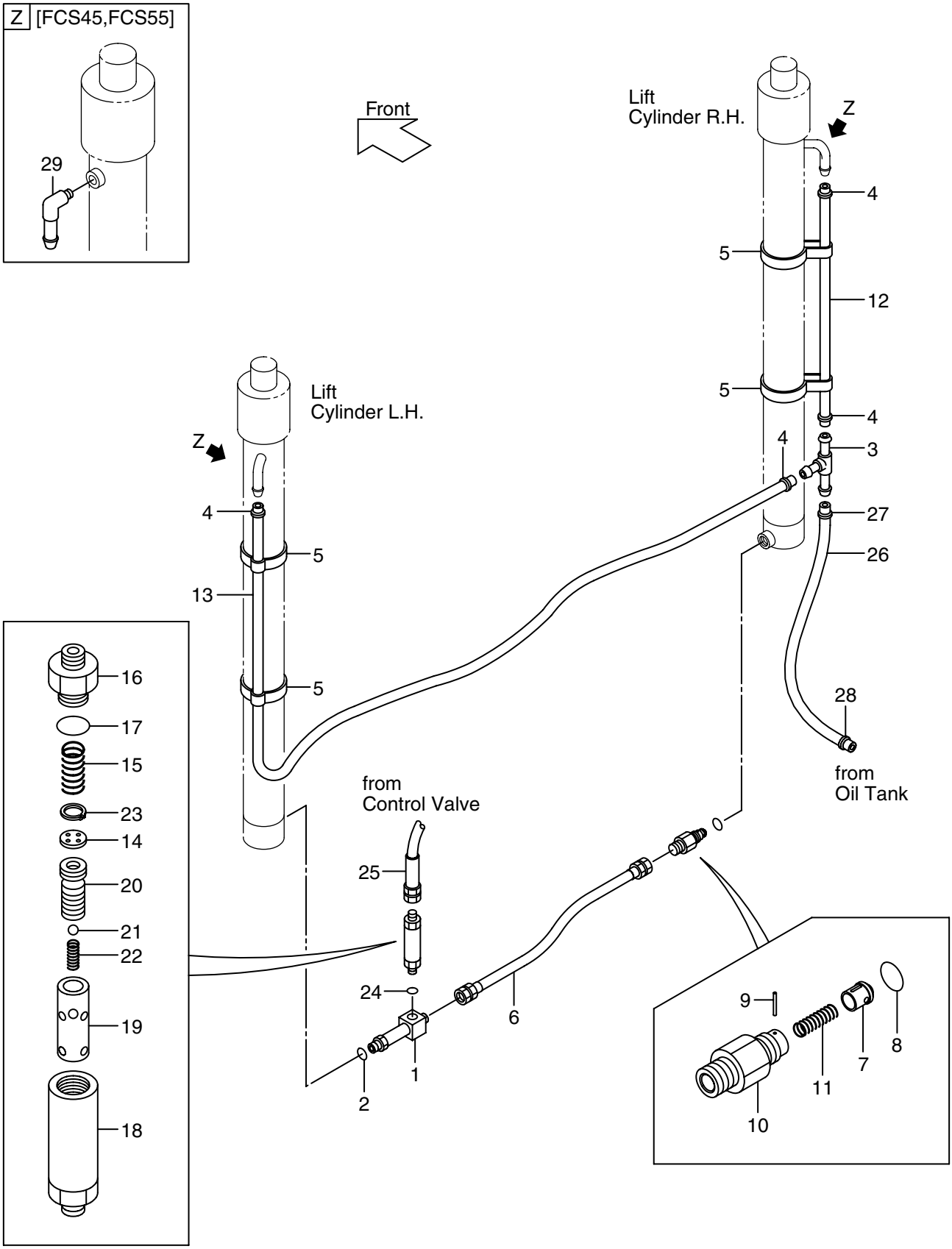

A: VM7P1 (FB10-8) B: VM7P1 (FB15-8) C: VM7P2 (FB18-8)

Item No.	Part No.	Mark	Description		Req'd	Remarks : serial No.
A1	234A8-41101		THREE WAY ASSY		1	INC.1,2 FC,RTL,CSA,CS35,FCS35
-	534A5-51151		THREE WAY ASSY		1	INC.1,2 FCS45,FCS55
1	NO PART NO.	#	THREE WAY		1	
2	03320-00140		O RING		1	FC,RTL,CSA,CS35,FCS35
-	63130-12971		O RING		1	FCS45,FCS55
3	53675-55051		THREE WAY		1	FC,RTL,CSA,CS35,FCS35, FCS45,FCS55
4	24329-46201		CLIP		4	FC,RTL,CSA,CS35,FCS35, FCS45,FCS55
5	22N58-45001		BAND		4	
6	277N8-42001		HOSE		1	
A2	216G0-93201		VALVE ASSY,CUT		1	INC.7-11 FC,RTL,CSA,CS35,FCS35
-	516G5-54201		VALVE ASSY,CUT		1	INC.7-11 FCS45,FCS55
7	NO PART NO.	#	PISTON		1	
8	03320-00140		O RING		1	FC,RTL,CSA,CS35,FCS35
-	63130-12971		O RING		1	FCS45,FCS55
9	02270-01014		PIN,SPRING		1	
10	NO PART NO.	#	FITTING		1	
11	234A8-42611		SPRING		1	
12	24328-40075		HOSE	VM200	1	
-	24328-40085		HOSE	VM225	1	
-	24328-40100		HOSE	VM250	1	
-	24328-40110		HOSE	VM270	1	
-	24328-40110		HOSE	VM275	1	
-	24328-40125		HOSE	VM300	1	
-	24328-40135		HOSE	VM325	1	
-	24328-40140		HOSE	VM330	1	
-	24328-40150		HOSE	VM350	1	
-	24328-40160		HOSE	VM366	1	
-	24328-40160		HOSE	VM370	1	
-	24328-40160		HOSE	VM375	1	
-	24328-40180		HOSE	VM400	1	
-	24328-40190		HOSE	VM425	1	
-	24328-40205		HOSE	VM450	1	
-	24328-40215		HOSE	VM475	1	
-	24328-40230		HOSE	VM500	1	
-	24328-40260		HOSE	VM550	1	
-	24328-40285		HOSE	VM600	1	
13	24328-40130		HOSE	VM200	1	
-	24328-40140		HOSE	VM225	1	
-	24328-40155		HOSE	VM250	1	
-	24328-40165		HOSE	VM270	1	
-	24328-40165		HOSE	VM275	1	
-	24328-40175		HOSE	VM300	1	
-	24328-40190		HOSE	VM325	1	
-	24328-40195		HOSE	VM330	1	

A: VM7P1 (FB10-8) B: VM7P1 (FB15-8) C: VM7P2 (FB18-8)

Item No.	Part No.	Mark	Description	Req'd	Remarks : serial No.
13	24328-40205		HOSE VM350	1	
-	24328-40215		HOSE VM366	1	
-	24328-40215		HOSE VM370	1	
-	24328-40215		HOSE VM375	1	
-	24328-40235		HOSE VM400	1	
-	24328-40245		HOSE VM425	1	
-	24328-40260		HOSE VM450	1	
-	24328-40270		HOSE VM475	1	
-	24328-40285		HOSE VM500	1	
-	24328-40315		HOSE VM550	1	
-	24328-40340		HOSE VM600	1	
A3	216G8-41001		REGULATOR ASSY	1	INC.14-23
14	NO PART NO.	#	PLATE	1	
15	27979-43101		SPRING	1	
16	NO PART NO.	#	FITTING	1	
17	03300-00280		O RING	1	
18	NO PART NO.	#	CASE	1	
19	NO PART NO.	#	SLEEVE	1	
20	NO PART NO.	#	PISTON	1	
21	24459-42951		BALL,NYLON	1	
22	214A8-44151		SPRING	1	
23	02110-00018		RING,SNAP	1	
24	03320-00180		O RING	1	FC,RTL,CSA,CS35,FCS35
-	59595-54381		O RING	1	FCS45,FCS55
25	281E8-42002		HOSE	1	FC,RTL,CS35,FCS35,FCS45, FCS55
-	281E8-42002		HOSE	1	LM/(FC,RTL,CS35,FCS35, FCS45,FCS55)
26	24328-40110		HOSE	1	FC,RTL,CS35,FCS35,FCS45, FCS55
-	24328-40110		HOSE	1	LM/(FC,RTL,CS35,FCS35, FCS45,FCS55)
27	04911-00021		CLIP	1	FC,RTL,CS35,FCS35,FCS45, FCS55
-	04911-00021		CLIP	1	LM/(FC,RTL,CS35,FCS35, FCS45,FCS55)
28	04911-00021		CLIP	1	FC,RTL,CS35,FCS35,FCS45, FCS55
-	04911-00021		CLIP	1	LM/(FC,RTL,CS35,FCS35, FCS45,FCS55)
29	23679-43341		ELBOW	2	FCS45,FCS55
-	NOT APPLICABLE		ELBOW	999	FC,RTL,CSA,CS35,FCS35

MEMO

FIG. 92 FORK [VFM81E]
(MD018120) ﾌｫｰｸ

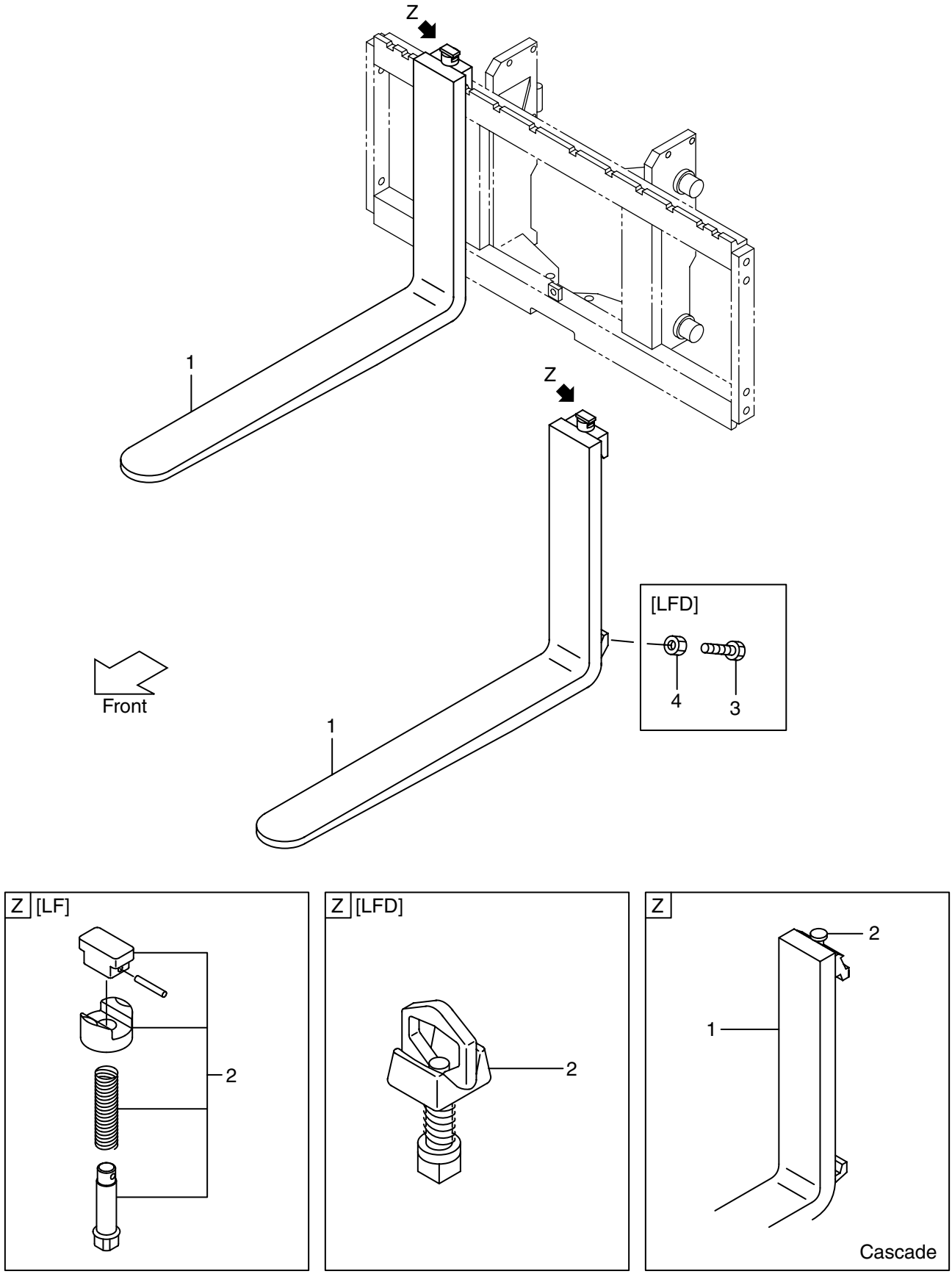

A: VFM81E (FB10-8) B: VFM81E (FB15-8) C: VFM81E (FB18-8)

Item No.	Part No.	Mark	Description	Req'd	Remarks : serial No.
1	210B8-10502		FORK	2	A INC.2 L=770
-	210F8-10512		FORK	2	B,C INC.2 L=920
-	210F8-10512		FORK	2	INC.2 EX L=920
-	210B8-10502		FORK	2	A INC.2 LF077
-	210B8-10512		FORK	2	A INC.2 LF085
-	210F8-10502		FORK	2	B,C INC.2 LF085
-	210F8-10572		FORK	2	INC.2 LF090
-	210B8-10522		FORK	2	A INC.2 LF092
-	210F8-10512		FORK	2	B,C INC.2 LF092
-	210F8-10582		FORK	2	INC.2 LF100
-	210F8-10522		FORK	2	INC.2 LF107
-	210F8-10592		FORK	2	INC.2 LF110
-	210F8-10602		FORK	2	INC.2 LF120
-	210F8-10532		FORK	2	INC.2 LF122
-	210H8-10612		FORK	2	INC.2 LF130
-	210H8-10532		FORK	2	INC.2 LF137
-	210H8-10622		FORK	2	INC.2 LF140
-	210H8-10632		FORK	2	INC.2 LF150
-	210H8-10542		FORK	2	INC.2 LF152
-	210H8-10642		FORK	2	INC.2 LF160

A: VFM81E (FB10-8) B: VFM81E (FB15-8) C: VFM81E (FB18-8)

Item No.	Part No.	Mark	Description	Req'd	Remarks : serial No.
1	210H8-10552		FORK	2	B,C INC.2 LF167
-	216B8-10301		FORK	2	A INC.2 LFD077
-	216B8-10311		FORK	2	A INC.2 LFD085
-	216G8-10301		FORK	2	B,C INC.2 LFD085
-	216G8-10371		FORK	2	INC.2 LFD090
-	216B8-10321		FORK	2	A INC.2 LFD092
-	216G8-10311		FORK	2	B,C INC.2 LFD092
-	216G8-10381		FORK	2	INC.2 LFD100
-	216G8-10321		FORK	2	INC.2 LFD107
-	216G8-10391		FORK	2	INC.2 LFD110
-	216G8-10401		FORK	2	INC.2 LFD120
-	216G8-10331		FORK	2	INC.2 LFD122
-	216G8-10411		FORK	2	INC.2 LFD130
-	216G8-10341		FORK	2	INC.2 LFD137
-	216G8-10421		FORK	2	INC.2 LFD140
-	216G8-10431		FORK	2	INC.2 LFD150
-	216G8-10351		FORK	2	INC.2 LFD152
-	216G8-10441		FORK	2	INC.2 LFD160
-	216G8-10361		FORK	2	B,C INC.2 LFD167
-	20A78-10601		FORK	2	B,C INC.2 CASCADE
-	20A78-10601		FORK	2	INC.2 (EX,LF092)/CASCADE

FIG. 92
(MD018120)

A: VFM81E (FB10-8) B: VFM81E (FB15-8) C: VFM81E (FB18-8)

Item No.	Part No.	Mark	Description	Req'd	Remarks : serial No.
1	20A78-10611		FORK	2	INC.2 LF107/CASCADE
-	20A78-10621		FORK	2	INC.2 LF122/CASCADE
-	20A78-10631		FORK	2	INC.2 LF137/CASCADE
-	20A78-10641		FORK	2	INC.2 LF152/CASCADE
-	20A78-10651		FORK	2	B,C INC.2 LF167/CASCADE
2	216G8-12931		STOPPER	2	LF
-	214A8-11001		STOPPER	2	LFD
-	W-K2PK-M		STOPPER	2	CASCADE
3	216G8-12101		BOLT	4	LFD
4	01402-00010		NUT	4	LFD

FIG. 93 LIFT BRACKET [VFM81E]
(MD010610) ﾘﾌﾄﾌﾞﾗｹｯﾄ

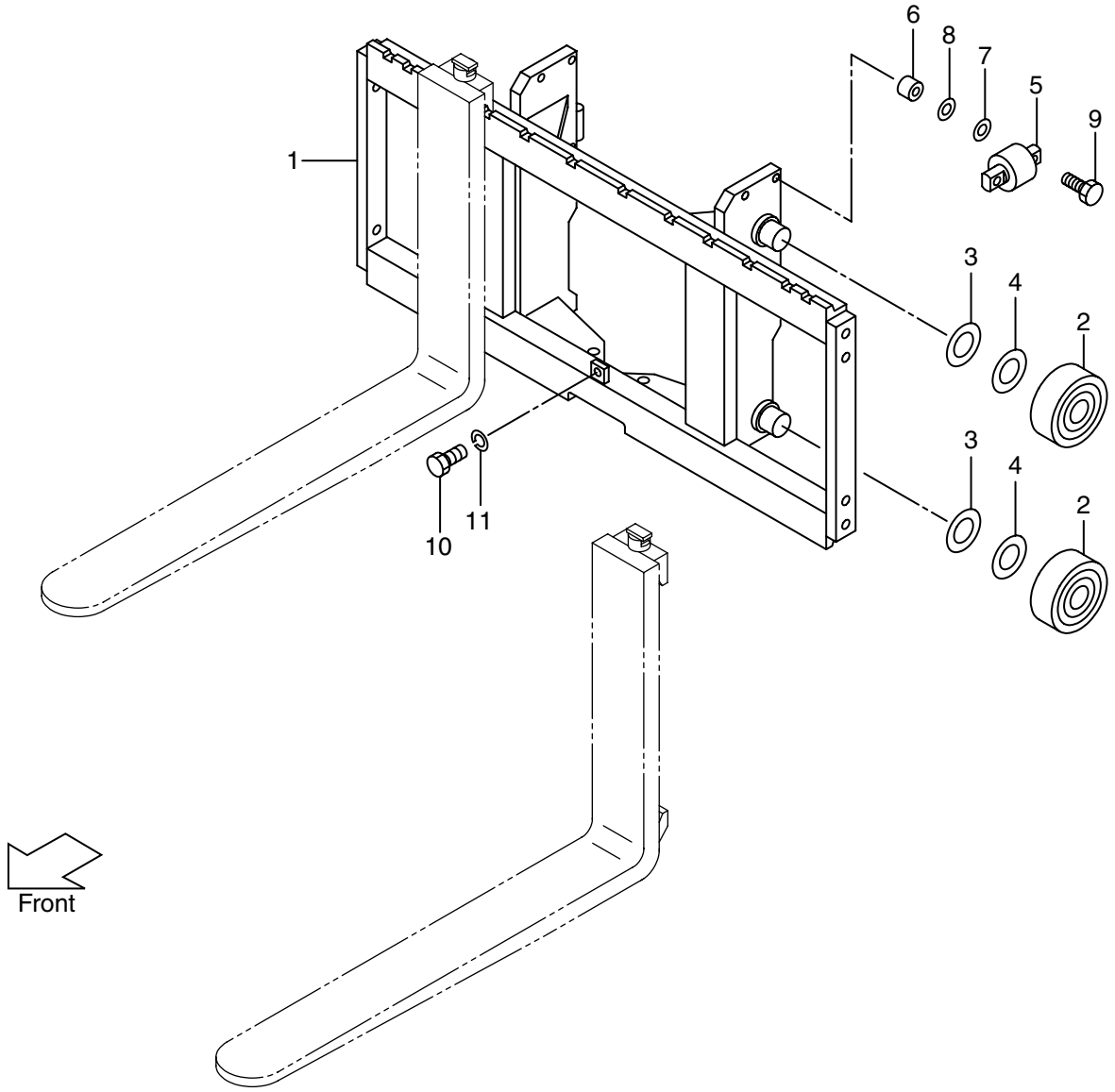

A: VFM81E (FB10-8) B: VFM81E (FB15-8) C: VFM81E (FB18-8)

Item No.	Part No.	Mark	Description	Req'd	Remarks : serial No.
1	218G0-60101		BRACKET,LIFT	1	
-	518G1-61301		BRACKET,LIFT	1	WFX110,WFX114,WFX127, WFX135,WFX138
-	518G1-61401		BRACKET,LIFT	1	WFX135,WFX138,WFX145, WFX146,WFX154,WFX180
2	211F8-22201		ROLLER,END,102.0	4	
-	211F8-22211		ROLLER,END,102.5	4	
-	511F3-74021		ROLLER,END,102.0	4	FC,CS35,FCS35,FCS45,FCS55
-	511F3-74031		ROLLER,END,102.5	4	FC,CS35,FCS35,FCS45,FCS55
3	211F8-22261		SHIM,T-0.5	4	
4	211F8-22271		SHIM,T-1.0	8	
5	22018-30304		ROLLER,SIDE,41.0	2	
-	510F3-74002		ROLLER,SIDE,40.0	2	FC,CS35,FCS35,FCS45,FCS55
6	22578-32841		SPACER	4	
7	22018-30261		SHIM,T-0.2	8	
8	22018-30121		SHIM,T-1.0	4	
9	01103-10045		BOLT&WASHER	4	
10	01100-12020		BOLT	1	
11	02010-00012		WASHER	1	

FIG. 94 BACKREST [VFM81E]
(MD018230) ﾊﾞｯｸﾚｽﾄ

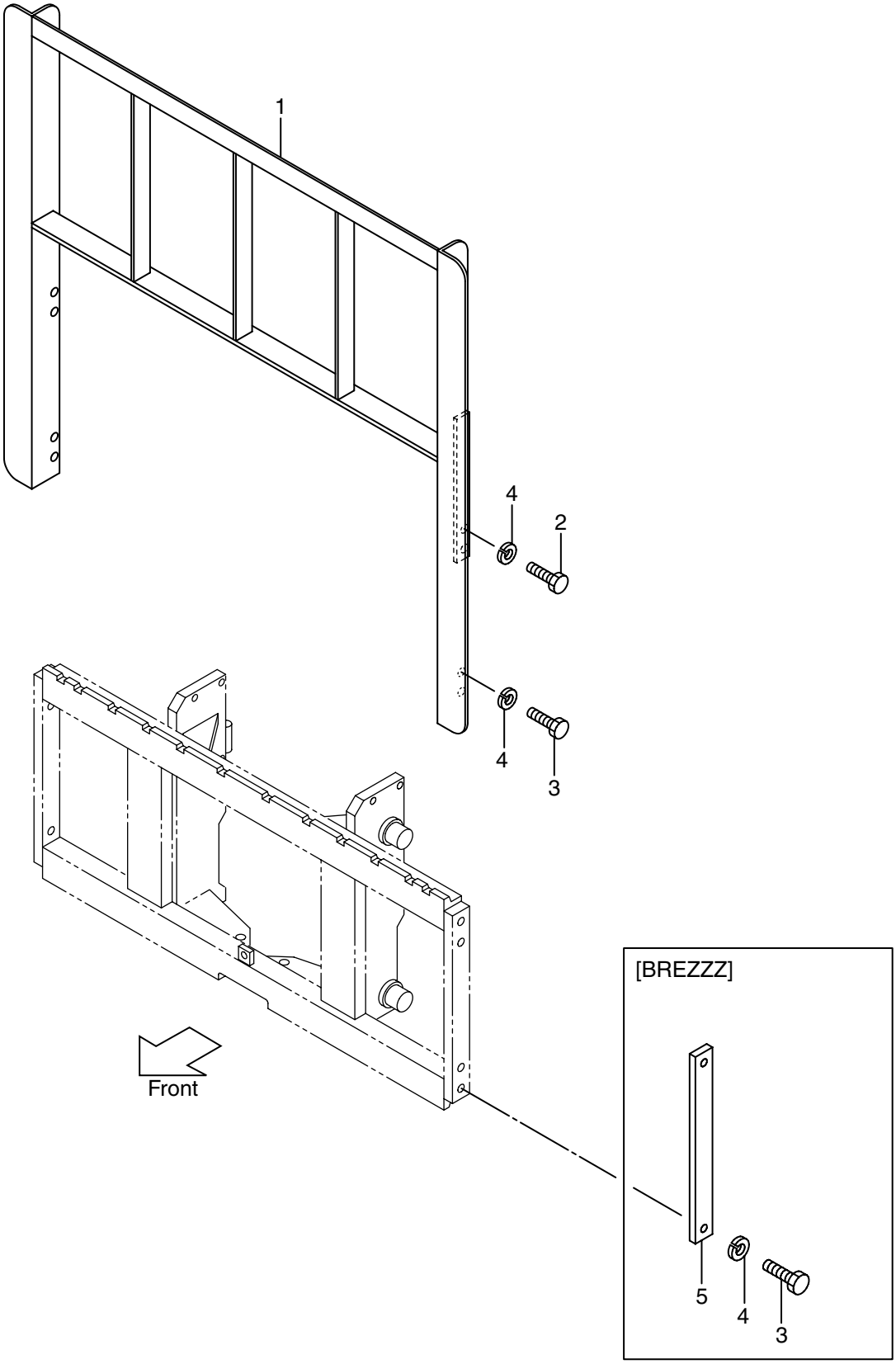

A: VFM81E (FB10-8) B: VFM81E (FB15-8) C: VFM81E (FB18-8)

Item No.	Part No.	Mark	Description	Req'd	Remarks : serial No.
1	216G8-22201		BACKREST	1	
-	50A72-74301		BACKREST	1	EXC,EXE,EXN
-	516G2-74301		BACKREST	1	EXA,HBR048
-	216G8-22302		BACKREST	1	HBR110,EX4HBR
-	216G8-22312		BACKREST	1	HBR120,EX4HBR
-	216G8-22322		BACKREST	1	HBR130,EX4HBR
-	216G8-22332		BACKREST	1	HBR140,EX4HBR
-	216G8-22342		BACKREST	1	HBR150,EX4HBR
-	50A72-74101		BACKREST	1	WF110,EX2WF
-	50A72-74101		BACKREST	1	WFX110/EXC
-	50A72-74201		BACKREST	1	WF135,EX2WF
-	50A72-74201		BACKREST	1	WFX135/EXC
-	516G2-74101		BACKREST	1	WFX110/EXA
-	516G2-74201		BACKREST	1	WFX135/EXA
2	01100-14030		BOLT	4	
-	01100-14030		BOLT	4	EXC,EXE,EXN, (WF110,WF135)/EXC
-	01100-14035		BOLT	4	HBR048,EXA, (WF110,WF135)/EXA
-	01100-14030		BOLT	4	HBR110-150,EX4HBR
-	01100-14030		BOLT	4	WF110,WF135,EX2WF
3	01100-14025		BOLT	4	
-	01100-14025		BOLT	4	HBR048,EXA,EXC,EXE,EXN, BREZZZ
-	01100-14030		BOLT	4	HBR110-150,EX4HBR
-	01100-14025		BOLT	4	WF110,WF135,EX2WF
-	01100-14025		BOLT	4	(WF110,WF135)/EXA, (WF110,WF135)/EXC
4	02010-00014		WASHER	8	
-	02010-00014		WASHER	4	BREZZZ
5	23659-42161		PLATE	2	BREZZZ

FIG. 95 MAST [VFM81E]
(MD010410) マスト

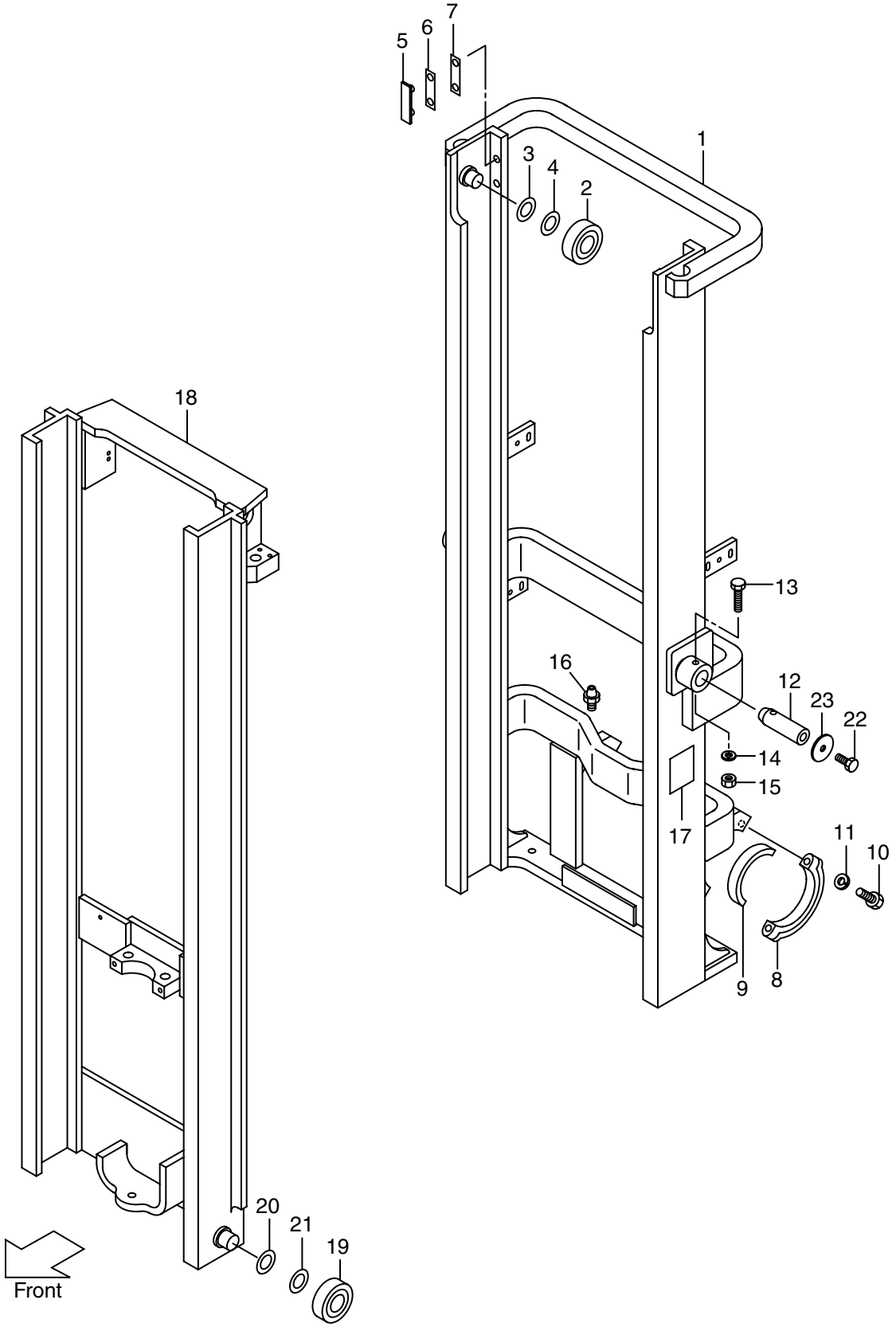

A: VFM81E (FB10-8) B: VFM81E (FB15-8) C: VFM81E (FB18-8)

Item No.	Part No.	Mark	Description		Req'd	Remarks : serial No.
1	281E0-40211		MAST,OUTER	VFM200	1	
-	281E0-40221		MAST,OUTER	VFM225	1	
-	281E0-40231		MAST,OUTER	VFM250	1	
-	281E0-40241		MAST,OUTER	VFM270	1	
-	281E0-40251		MAST,OUTER	VFM275	1	
-	281E0-40201		MAST,OUTER	VFM300	1	
-	281E0-40261		MAST,OUTER	VFM325	1	
-	281E0-40271		MAST,OUTER	VFM330	1	
-	281E0-40281		MAST,OUTER	VFM350	1	
-	281E0-40291		MAST,OUTER	VFM366	1	
-	281E0-40301		MAST,OUTER	VFM370	1	
-	281E0-40311		MAST,OUTER	VFM375	1	
-	281E0-40321		MAST,OUTER	VFM400	1	
-	281E0-40331		MAST,OUTER	VFM425	1	
-	281E0-40341		MAST,OUTER	VFM450	1	
-	281E0-40351		MAST,OUTER	VFM475	1	
-	281E0-40361		MAST,OUTER	VFM500	1	
-	281E0-40371		MAST,OUTER	VFM550	1	
-	281E0-40381		MAST,OUTER	VFM600	1	
2	211F8-22221		ROLLER,END,102.0		2	
-	211F8-22231		ROLLER,END,102.5		2	
-	511F3-74021		ROLLER,END,102.0		2	FC,CS35,FCS35,FCS45,FCS55
-	511F3-74031		ROLLER,END,102.5		2	FC,CS35,FCS35,FCS45,FCS55
3	211F8-22261		SHIM,T-0.5		4	
4	211F8-22271		SHIM,T-1.0		8	
5	216G8-33401		SLIPPER		2	
6	216G8-33361		SHIM,T-0.5		8	
7	216G8-33371		SHIM,T-1.0		4	
8	210F6-12441		CAP		2	
9	216G8-02001		BUSHING		2	
10	01103-14065		BOLT		4	
11	02010-00014		WASHER		4	
12	210F8-02102		PIN		2	
13	216G8-52321		BOLT		2	
14	02010-20012		WASHER		2	
15	234A8-42571		NUT		2	
16	04901-00100		FITTING		2	
17	NO PART NO.	#	NAME PLATE		1	
18	218G0-40411		MAST,INNER	VFM200	1	
-	218G0-40421		MAST,INNER	VFM225	1	
-	218G0-40431		MAST,INNER	VFM250	1	
-	218G0-40441		MAST,INNER	VFM270	1	
-	218G0-40451		MAST,INNER	VFM275	1	
-	218G0-40401		MAST,INNER	VFM300	1	
-	218G0-40461		MAST,INNER	VFM325	1	
-	218G0-40471		MAST,INNER	VFM330	1	
-	218G0-40481		MAST,INNER	VFM350	1	
-	218G0-40491		MAST,INNER	VFM366	1	
-	218G0-40501		MAST,INNER	VFM370	1	
-	218G0-40511		MAST,INNER	VFM375	1	

A: VFM81E (FB10-8) B: VFM81E (FB15-8) C: VFM81E (FB18-8)

Item No.	Part No.	Mark	Description		Req'd	Remarks : serial No.
18	218G0-40521		MAST,INNER	VFM400	1	
-	218G0-40531		MAST,INNER	VFM425	1	
-	218G0-40541		MAST,INNER	VFM450	1	
-	218G0-40551		MAST,INNER	VFM475	1	
-	218G0-40561		MAST,INNER	VFM500	1	
-	218G0-40571		MAST,INNER	VFM550	1	
-	218G0-40581		MAST,INNER	VFM600	1	
19	211F8-22221		ROLLER,END,102.0		2	
-	211F8-22231		ROLLER,END,102.5		2	
-	511F3-74021		ROLLER,END,102.0		2	FC,CS35,FCS35,FCS45,FCS55
-	511F3-74031		ROLLER,END,102.5		2	FC,CS35,FCS35,FCS45,FCS55
20	211F8-22261		SHIM,T-0.5		4	
21	211F8-22271		SHIM,T-1.0		8	
22	216G4-12251		BOLT		2	
23	216G8-52311		WASHER		2	

MEMO

FIG. 96 TILT GAUGE [TG,PPC,PR] [VFM81E]
(MD010420) ﾃｨﾙﾄｹﾞｰｼﾞ

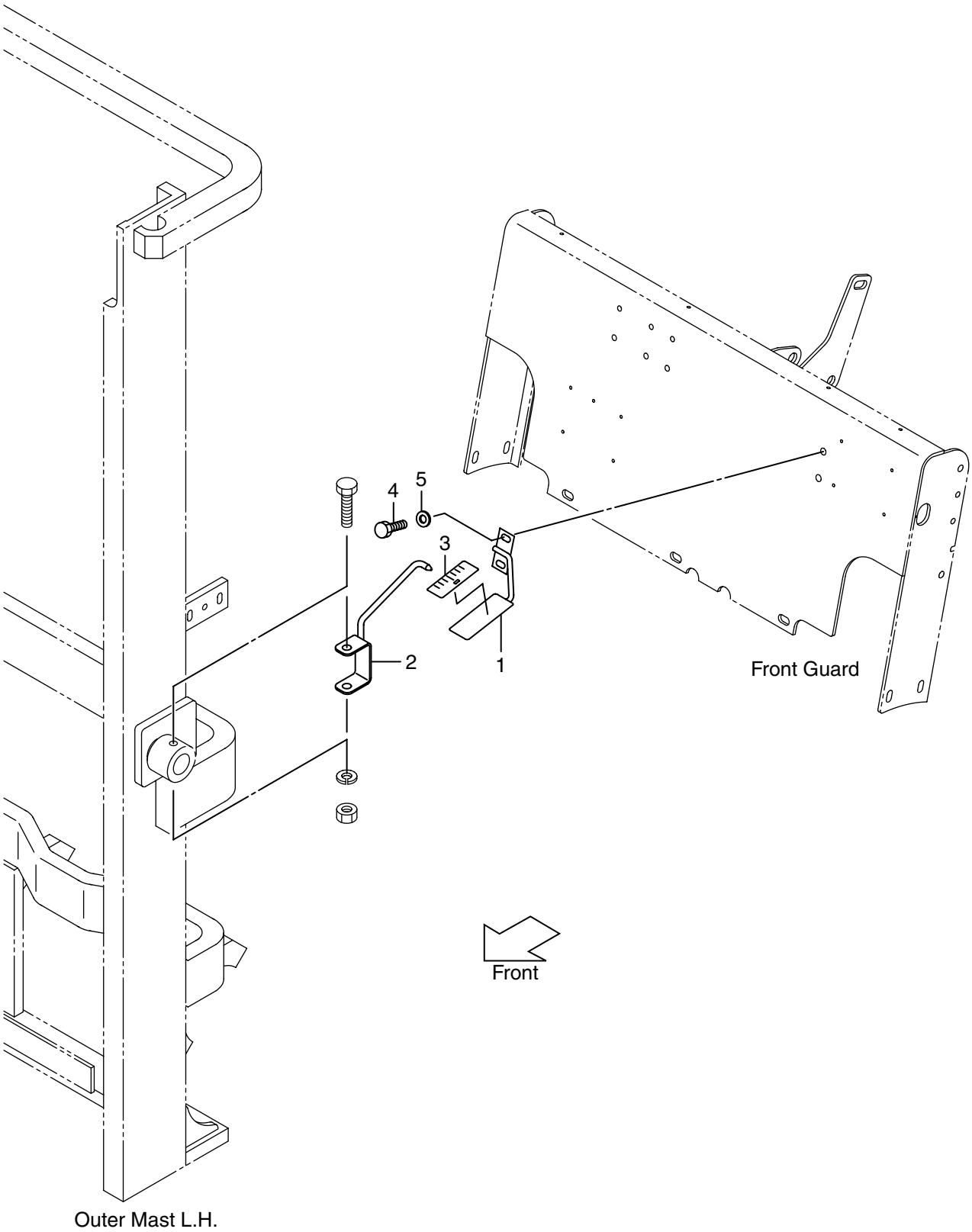

A: VFM81E (FB10-8) B: VFM81E (FB15-8) C: VFM81E (FB18-8)

Item No.	Part No.	Mark	Description		Req'd	Remarks : serial No.
1	681N0-10011		GAUGE,TILT	VFM250-600	1	
2	681E0-10051		INDICATOR	VFM250-600	1	
3	62459-23371		SEAL	VFM250-600	1	
4	278R8-43481		BOLT	VFM250-600	2	
5	02000-20010		WASHER	VFM250-600	2	

FIG. 97 LIFT CYLINDER (FRONT) [VFM81E]

(MD010510) リフトシリンダ（フロント）

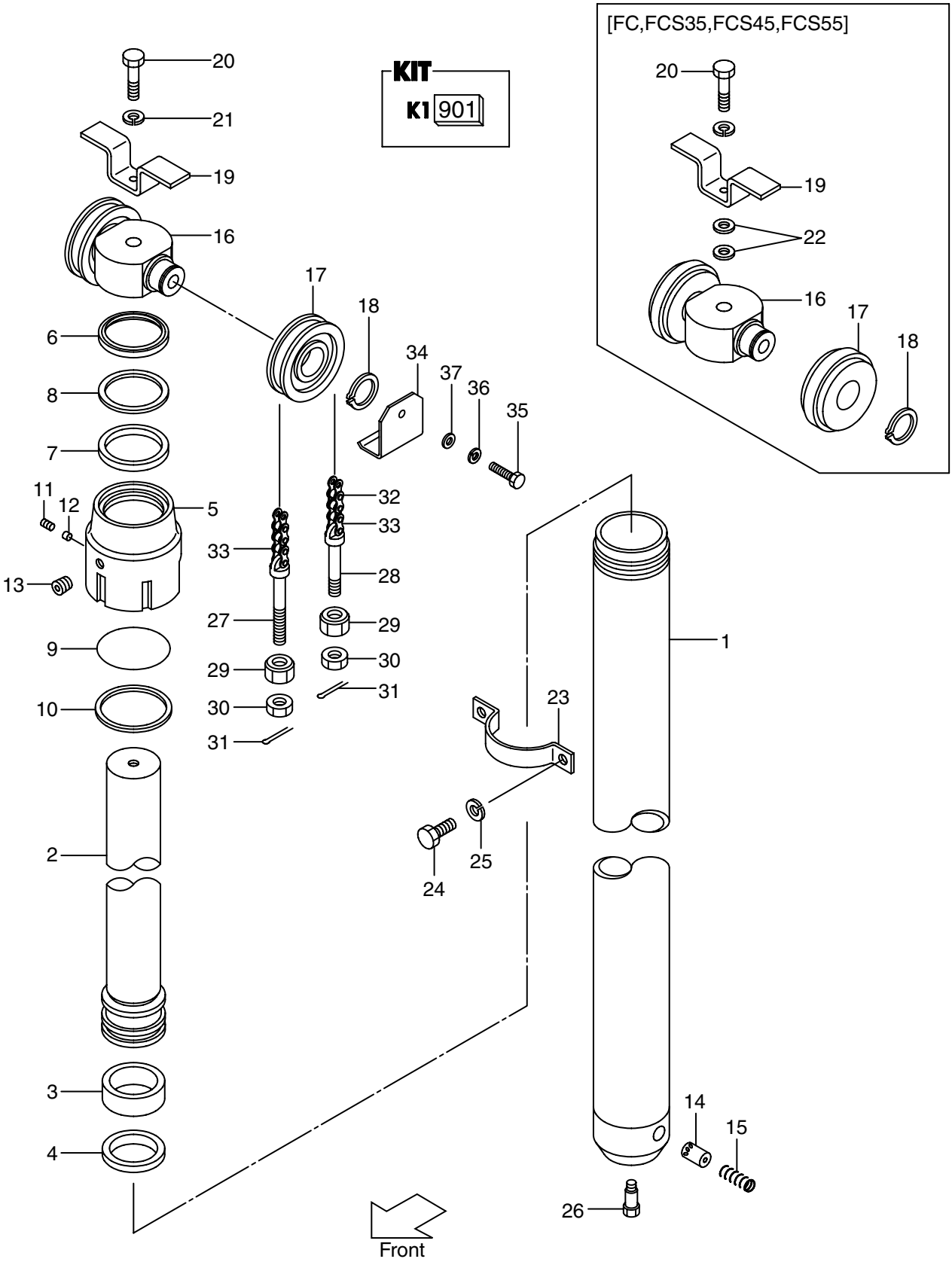

A: VFM81E (FB10-8) B: VFM81E (FB15-8) C: VFM81E (FB18-8)

Item No.	Part No.	Mark	Description		Req'd	Remarks : serial No.
A1	211F0-50111		LIFT CYLINDER ASSY	VFM200	1	INC.1-15
-	211F0-50121		LIFT CYLINDER ASSY	VFM225	1	INC.1-15
-	211F0-50131		LIFT CYLINDER ASSY	VFM250	1	INC.1-15
-	211F0-50141		LIFT CYLINDER ASSY	VFM270	1	INC.1-15
-	211F0-50151		LIFT CYLINDER ASSY	VFM275	1	INC.1-15
-	211F0-50101		LIFT CYLINDER ASSY	VFM300	1	INC.1-15
-	211F0-50161		LIFT CYLINDER ASSY	VFM325	1	INC.1-15
-	211F0-50171		LIFT CYLINDER ASSY	VFM330	1	INC.1-15
-	211F0-50181		LIFT CYLINDER ASSY	VFM350	1	INC.1-15
-	211F0-50191		LIFT CYLINDER ASSY	VFM366	1	INC.1-15
-	211F0-50201		LIFT CYLINDER ASSY	VFM370	1	INC.1-15
-	211F0-50211		LIFT CYLINDER ASSY	VFM375	1	INC.1-15
-	211F0-50221		LIFT CYLINDER ASSY	VFM400	1	INC.1-15
-	211F0-50231		LIFT CYLINDER ASSY	VFM425	1	INC.1-15
-	211F0-50241		LIFT CYLINDER ASSY	VFM450	1	INC.1-15
-	211F0-50251		LIFT CYLINDER ASSY	VFM475	1	INC.1-15
-	211F0-50261		LIFT CYLINDER ASSY	VFM500	1	INC.1-15
-	211F0-50271		LIFT CYLINDER ASSY	VFM550	1	INC.1-15
-	211F0-50281		LIFT CYLINDER ASSY	VFM600	1	INC.1-15
-	511F5-51011		LIFT CYLINDER ASSY	VFM200	1	INC.1-15 CS35,FCS35,FCS45,FCS55
-	511F5-51021		LIFT CYLINDER ASSY	VFM225	1	INC.1-15 CS35,FCS35,FCS45,FCS55
-	511F5-51031		LIFT CYLINDER ASSY	VFM250	1	INC.1-15 CS35,FCS35,FCS45,FCS55
-	511F5-51041		LIFT CYLINDER ASSY	VFM270	1	INC.1-15 CS35,FCS35,FCS45,FCS55
-	511F5-51051		LIFT CYLINDER ASSY	VFM275	1	INC.1-15 CS35,FCS35,FCS45,FCS55
-	511F5-51001		LIFT CYLINDER ASSY	VFM300	1	INC.1-15 CS35,FCS35,FCS45,FCS55
-	511F5-51061		LIFT CYLINDER ASSY	VFM325	1	INC.1-15 CS35,FCS35,FCS45,FCS55
-	511F5-51071		LIFT CYLINDER ASSY	VFM330	1	INC.1-15 CS35,FCS35,FCS45,FCS55
-	511F5-51081		LIFT CYLINDER ASSY	VFM350	1	INC.1-15 CS35,FCS35,FCS45,FCS55
-	511F5-51091		LIFT CYLINDER ASSY	VFM366	1	INC.1-15 CS35,FCS35,FCS45,FCS55
-	511F5-51101		LIFT CYLINDER ASSY	VFM370	1	INC.1-15 CS35,FCS35,FCS45,FCS55
-	511F5-51111		LIFT CYLINDER ASSY	VFM375	1	INC.1-15 CS35,FCS35,FCS45,FCS55
-	511F5-51121		LIFT CYLINDER ASSY	VFM400	1	INC.1-15 CS35,FCS35,FCS45,FCS55
-	511F5-51131		LIFT CYLINDER ASSY	VFM425	1	INC.1-15 CS35,FCS35,FCS45,FCS55
-	511F5-51141		LIFT CYLINDER ASSY	VFM450	1	INC.1-15 CS35,FCS35,FCS45,FCS55

A: VFM81E (FB10-8) B: VFM81E (FB15-8) C: VFM81E (FB18-8)

Item No.	Part No.	Mark	Description		Req'd	Remarks : serial No.
A1	511F5-51151		LIFT CYLINDER ASSY	VFM475	1	INC.1-15 CS35,FCS35,FCS45,FCS55
-	511F5-51161		LIFT CYLINDER ASSY	VFM500	1	INC.1-15 CS35,FCS35,FCS45,FCS55
-	511F5-51171		LIFT CYLINDER ASSY	VFM550	1	INC.1-15 CS35,FCS35,FCS45,FCS55
-	511F5-51181		LIFT CYLINDER ASSY	VFM600	1	INC.1-15 CS35,FCS35,FCS45,FCS55
901	27390-59801	K1	KIT,OVERHAUL		1	INC.3,4,6-10
1	211F0-50311		BODY,CYLINDER	VFM200	1	
-	211F0-50321		BODY,CYLINDER	VFM225	1	
-	211F0-50331		BODY,CYLINDER	VFM250	1	
-	211F0-50341		BODY,CYLINDER	VFM270	1	
-	211F0-50351		BODY,CYLINDER	VFM275	1	
-	211F0-50301		BODY,CYLINDER	VFM300	1	
-	211F0-50361		BODY,CYLINDER	VFM325	1	
-	211F0-50371		BODY,CYLINDER	VFM330	1	
-	211F0-50381		BODY,CYLINDER	VFM350	1	
-	211F0-50391		BODY,CYLINDER	VFM366	1	
-	211F0-50401		BODY,CYLINDER	VFM370	1	
-	211F0-50411		BODY,CYLINDER	VFM375	1	
-	211F0-50421		BODY,CYLINDER	VFM400	1	
-	211F0-50431		BODY,CYLINDER	VFM425	1	
-	211F0-50441		BODY,CYLINDER	VFM450	1	
-	211F0-50451		BODY,CYLINDER	VFM475	1	
-	211F0-50461		BODY,CYLINDER	VFM500	1	
-	211F0-50471		BODY,CYLINDER	VFM550	1	
-	211F0-50481		BODY,CYLINDER	VFM600	1	
2	210F0-50511		ROD,PISTON	VFM200	1	
-	210F0-50521		ROD,PISTON	VFM225	1	
-	54238-40311		ROD,PISTON	VFM250	1	
-	27390-50321		ROD,PISTON	VFM270	1	
-	54238-40321		ROD,PISTON	VFM275	1	
-	54238-40301		ROD,PISTON	VFM300	1	
-	27390-50331		ROD,PISTON	VFM325	1	
-	54238-40331		ROD,PISTON	VFM330	1	
-	54238-40341		ROD,PISTON	VFM350	1	
-	27390-50341		ROD,PISTON	VFM366	1	
-	27390-50351		ROD,PISTON	VFM370	1	
-	54238-40351		ROD,PISTON	VFM375	1	
-	27390-50361		ROD,PISTON	VFM400	1	
-	27390-50371		ROD,PISTON	VFM425	1	
-	27390-50381		ROD,PISTON	VFM450	1	
-	27390-50391		ROD,PISTON	VFM475	1	
-	27390-50401		ROD,PISTON	VFM500	1	
-	27390-50411		ROD,PISTON	VFM550	1	
-	27390-50421		ROD,PISTON	VFM600	1	
3	22518-40121	*	WEARING		1	
4	54238-42011	*	RING,PISTON		1	
5	29560-82012		CAP		1	

A: VFM81E (FB10-8) B: VFM81E (FB15-8) C: VFM81E (FB18-8)

Item No.	Part No.	Mark	Description		Req'd	Remarks : serial No.
6	25808-42481	*	SEAL,DUST		1	
-	59565-54141		SEAL,DUST		1	FC,FCS35,FCS45,FCS55
7	24230-82211	*	PACKING		1	
-	54235-52401		PACKING		1	FC,FCS35,FCS45,FCS55
8	24230-82221	*	RING,BACK UP		1	
9	24230-82291	*	O RING		1	
-	59595-54541		O RING		1	FC,FCS35,FCS45,FCS55
10	24230-82231	*	RING,BACK UP		1	
11	25908-44101		PLUG		1	
12	25908-44111		PLUG,NYLON		1	
13	23870-52871		PLUG		1	
14	211F0-82551		PISTON		1	
15	24389-46021		SPRING		1	
16	215T0-83001		HEAD,PISTON		1	
-	215T0-83001		HEAD,PISTON		1	EX
-	27390-82011		HEAD,PISTON		1	FC,FCS35,FCS45,FCS55
17	216G8-42031		SHEAVE		2	
-	90789-40100		SHEAVE		2	FC,FCS35,FCS45,FCS55
-	216G8-42031		SHEAVE		2	EX
18	02100-00035		RING,SNAP		2	
-	02100-00035		RING,SNAP		2	EX
-	02100-00040		RING,SNAP		2	FC,FCS35,FCS45,FCS55
19	215T0-83021		STOPPER		1	
-	215T0-83021		STOPPER		1	EX
-	27970-82211		STOPPER		1	FC,FCS35,FCS45,FCS55
20	01100-16060		BOLT		1	
-	01100-16060		BOLT		1	EX
-	01100-16065		BOLT		1	FC,FCS35,FCS45,FCS55
21	02010-00016		WASHER		1	
22	02000-00016		WASHER		2	FC,FCS35,FCS45,FCS55
23	27390-82101		SUPPORT		1	
24	01103-10020		BOLT		2	
25	02011-00010		WASHER		2	
26	214A0-82831		BOLT		1	
27	218G8-42501		PIN,ANCHOR		2	
-	510F5-54051		PIN,ANCHOR		2	FC,FCS35,FCS45,FCS55
28	218G8-42521		PIN,ANCHOR		2	
-	510F5-54061		PIN,ANCHOR		2	FC,FCS35,FCS45,FCS55
29	22118-40181		NUT		4	
30	01400-00014		NUT		4	
31	02200-03030		PIN,COTTER		4	
32	218G8-45611		CHAIN	VFM200	2	INC.33
-	218G8-45691		CHAIN	VFM225	2	INC.33
-	218G8-45771		CHAIN	VFM250	2	INC.33
-	218G8-45831		CHAIN	VFM270	2	INC.33
-	218G8-45851		CHAIN	VFM275	2	INC.33
-	218G8-45931		CHAIN	VFM300	2	INC.33
-	218G8-46011		CHAIN	VFM325	2	INC.33
-	218G8-46031		CHAIN	VFM330	2	INC.33
-	218G8-46091		CHAIN	VFM350	2	INC.33

A: VFM81E (FB10-8) B: VFM81E (FB15-8) C: VFM81E (FB18-8)

Item No.	Part No.	Mark	Description		Req'd	Remarks : serial No.
32	218G8-46151		CHAIN	VFM366	2	INC.33
-	218G8-46151		CHAIN	VFM370	2	INC.33
-	218G8-46171		CHAIN	VFM375	2	INC.33
-	218G8-46271		CHAIN	VFM400	2	INC.33
-	218G8-46351		CHAIN	VFM425	2	INC.33
-	218G8-46431		CHAIN	VFM450	2	INC.33
-	218G8-46511		CHAIN	VFM475	2	INC.33
-	218G8-46591		CHAIN	VFM500	2	INC.33
-	218G8-46791		CHAIN	VFM550	2	INC.33
-	218G8-46951		CHAIN	VFM600	2	INC.33
-	09001-08043		CHAIN	VFM200	2	FC,FCS35,FCS45,FCS55
-	09001-08047		CHAIN	VFM225	2	FC,FCS35,FCS45,FCS55
-	09001-08053		CHAIN	VFM250	2	FC,FCS35,FCS45,FCS55
-	09001-08055		CHAIN	VFM270	2	FC,FCS35,FCS45,FCS55
-	09001-08057		CHAIN	VFM275	2	FC,FCS35,FCS45,FCS55
-	09001-08061		CHAIN	VFM300	2	FC,FCS35,FCS45,FCS55
-	09001-08067		CHAIN	VFM325	2	FC,FCS35,FCS45,FCS55
-	09001-08067		CHAIN	VFM330	2	FC,FCS35,FCS45,FCS55
-	09001-08071		CHAIN	VFM350	2	FC,FCS35,FCS45,FCS55
-	09001-08075		CHAIN	VFM366	2	FC,FCS35,FCS45,FCS55
-	09001-08075		CHAIN	VFM370	2	FC,FCS35,FCS45,FCS55
-	09001-08077		CHAIN	VFM375	2	FC,FCS35,FCS45,FCS55
-	09001-08083		CHAIN	VFM400	2	FC,FCS35,FCS45,FCS55
-	09001-08089		CHAIN	VFM425	2	FC,FCS35,FCS45,FCS55
-	09001-08093		CHAIN	VFM450	2	FC,FCS35,FCS45,FCS55
-	09001-08099		CHAIN	VFM475	2	FC,FCS35,FCS45,FCS55
-	09001-08103		CHAIN	VFM500	2	FC,FCS35,FCS45,FCS55
-	09001-08115		CHAIN	VFM550	2	FC,FCS35,FCS45,FCS55
-	09001-08125		CHAIN	VFM600	2	FC,FCS35,FCS45,FCS55
33	218G8-42701		LINK		4	
34	57393-02041		COVER		2	EXE,EXEEC,EXN,EXNEC
35	01100-16016		BOLT		2	EXE,EXEEC,EXN,EXNEC
36	02010-00016		WASHER		2	EXE,EXEEC,EXN,EXNEC
37	02000-00016		WASHER		2	EXE,EXEEC,EXN,EXNEC

MEMO

FIG. 98 LIFT CYLINDER (REAR) [VFM81E]

(MD010520) リフトシリンダ（リヤー）

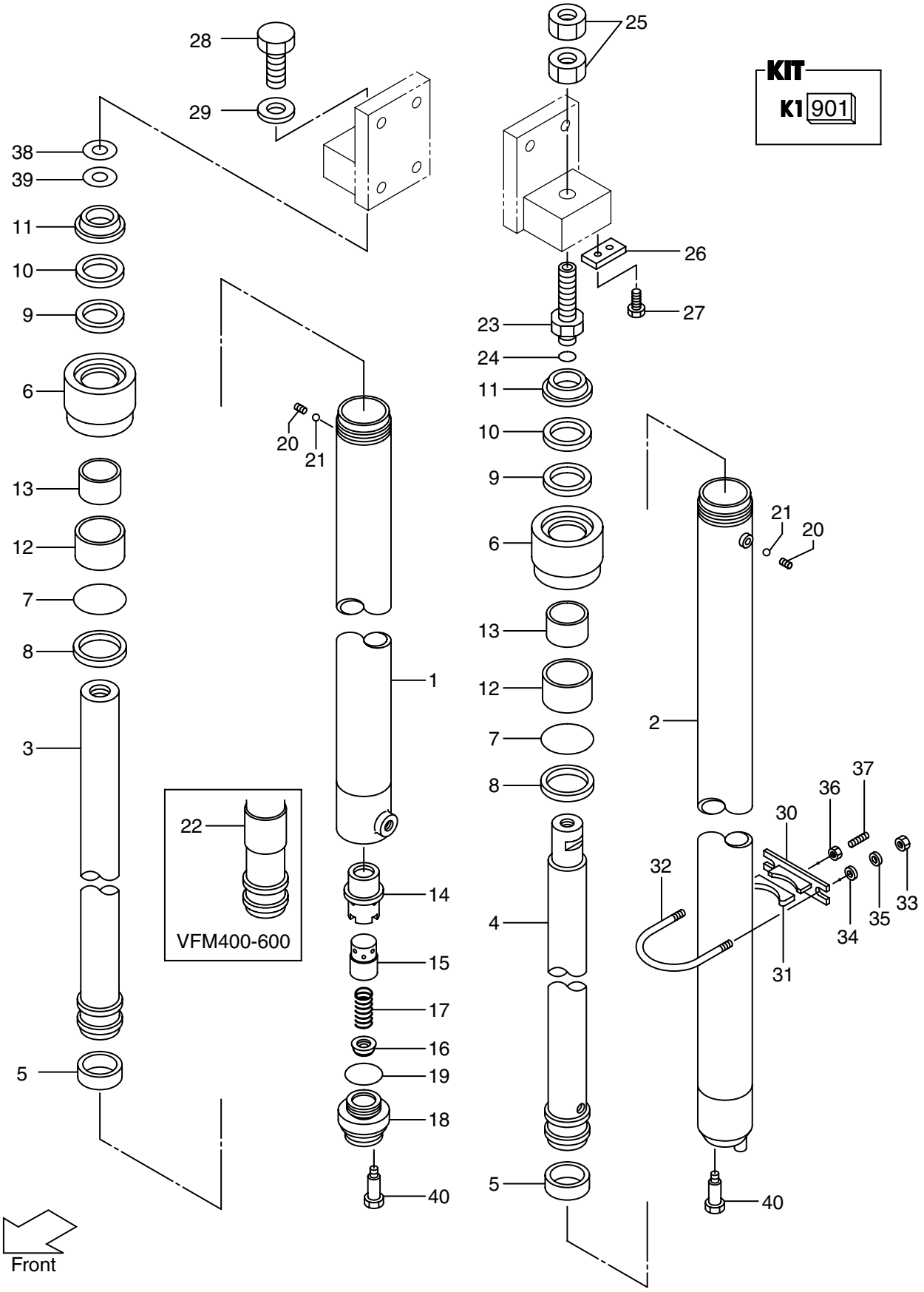

A: VFM81E (FB10-8) B: VFM81E (FB15-8) C: VFM81E (FB18-8)

Item No.	Part No.	Mark	Description	Req'd	Remarks : serial No.
A1	216G0-50211		LIFT CYLINDER ASSY,RH VFM200	1	INC.1,3,5-21
-	216G0-50221		LIFT CYLINDER ASSY,RH VFM225	1	INC.1,3,5-21
-	216G0-50231		LIFT CYLINDER ASSY,RH VFM250	1	INC.1,3,5-21
-	216G0-50241		LIFT CYLINDER ASSY,RH VFM270	1	INC.1,3,5-21
-	216G0-50251		LIFT CYLINDER ASSY,RH VFM275	1	INC.1,3,5-21
-	216G0-50201		LIFT CYLINDER ASSY,RH VFM300	1	INC.1,3,5-21
-	216G0-50261		LIFT CYLINDER ASSY,RH VFM325	1	INC.1,3,5-21
-	216G0-50271		LIFT CYLINDER ASSY,RH VFM330	1	INC.1,3,5-21
-	216G0-50281		LIFT CYLINDER ASSY,RH VFM350	1	INC.1,3,5-21
-	216G0-50291		LIFT CYLINDER ASSY,RH VFM366	1	INC.1,3,5-21
-	216G0-50301		LIFT CYLINDER ASSY,RH VFM370	1	INC.1,3,5-21
-	216G0-50311		LIFT CYLINDER ASSY,RH VFM375	1	INC.1,3,5-21
-	216G0-50321		LIFT CYLINDER ASSY,RH VFM400	1	INC.1,3,5-22
-	216G0-50331		LIFT CYLINDER ASSY,RH VFM425	1	INC.1,3,5-22
-	216G0-50341		LIFT CYLINDER ASSY,RH VFM450	1	INC.1,3,5-22
-	216G0-50351		LIFT CYLINDER ASSY,RH VFM475	1	INC.1,3,5-22
-	216G0-50361		LIFT CYLINDER ASSY,RH VFM500	1	INC.1,3,5-22
-	216G0-50371		LIFT CYLINDER ASSY,RH VFM550	1	INC.1,3,5-22
-	216G0-50381		LIFT CYLINDER ASSY,RH VFM600	1	INC.1,3,5-22
-	516G5-51011		LIFT CYLINDER ASSY,RH VFM200	1	INC.1,3,5-21 CS35,FCS35,FCS45,FCS55
-	516G5-51021		LIFT CYLINDER ASSY,RH VFM225	1	INC.1,3,5-21 CS35,FCS35,FCS45,FCS55
-	516G5-51031		LIFT CYLINDER ASSY,RH VFM250	1	INC.1,3,5-21 CS35,FCS35,FCS45,FCS55
-	516G5-51041		LIFT CYLINDER ASSY,RH VFM270	1	INC.1,3,5-21 CS35,FCS35,FCS45,FCS55
-	516G5-51051		LIFT CYLINDER ASSY,RH VFM275	1	INC.1,3,5-21 CS35,FCS35,FCS45,FCS55
-	516G5-51001		LIFT CYLINDER ASSY,RH VFM300	1	INC.1,3,5-21 CS35,FCS35,FCS45,FCS55
-	516G5-51061		LIFT CYLINDER ASSY,RH VFM325	1	INC.1,3,5-21 CS35,FCS35,FCS45,FCS55
-	516G5-51071		LIFT CYLINDER ASSY,RH VFM330	1	INC.1,3,5-21 CS35,FCS35,FCS45,FCS55
-	516G5-51081		LIFT CYLINDER ASSY,RH VFM350	1	INC.1,3,5-21 CS35,FCS35,FCS45,FCS55
-	516G5-51091		LIFT CYLINDER ASSY,RH VFM366	1	INC.1,3,5-21 CS35,FCS35,FCS45,FCS55
-	516G5-51101		LIFT CYLINDER ASSY,RH VFM370	1	INC.1,3,5-21 CS35,FCS35,FCS45,FCS55
-	516G5-51111		LIFT CYLINDER ASSY,RH VFM375	1	INC.1,3,5-21 CS35,FCS35,FCS45,FCS55
-	516G5-51121		LIFT CYLINDER ASSY,RH VFM400	1	INC.1,3,5-22 CS35,FCS35,FCS45,FCS55
-	516G5-51131		LIFT CYLINDER ASSY,RH VFM425	1	INC.1,3,5-22 CS35,FCS35,FCS45,FCS55
-	516G5-51141		LIFT CYLINDER ASSY,RH VFM450	1	INC.1,3,5-22 CS35,FCS35,FCS45,FCS55

A: VFM81E (FB10-8) B: VFM81E (FB15-8) C: VFM81E (FB18-8)

Item No.	Part No.	Mark	Description	Req'd	Remarks : serial No.
A1	516G5-51151		LIFT CYLINDER ASSY,RH VFM475	1	INC.1,3,5-22 CS35,FCS35,FCS45,FCS55
-	516G5-51161		LIFT CYLINDER ASSY,RH VFM500	1	INC.1,3,5-22 CS35,FCS35,FCS45,FCS55
-	516G5-51171		LIFT CYLINDER ASSY,RH VFM550	1	INC.1,3,5-22 CS35,FCS35,FCS45,FCS55
-	516G5-51181		LIFT CYLINDER ASSY,RH VFM600	1	INC.1,3,5-22 CS35,FCS35,FCS45,FCS55
A2	216G0-50411		LIFT CYLINDER ASSY,LH VFM200	1	INC.2,4-13,20,21,23,24
-	216G0-50421		LIFT CYLINDER ASSY,LH VFM225	1	INC.2,4-13,20,21,23,24
-	216G0-50431		LIFT CYLINDER ASSY,LH VFM250	1	INC.2,4-13,20,21,23,24
-	216G0-50441		LIFT CYLINDER ASSY,LH VFM270	1	INC.2,4-13,20,21,23,24
-	216G0-50451		LIFT CYLINDER ASSY,LH VFM275	1	INC.2,4-13,20,21,23,24
-	216G0-50401		LIFT CYLINDER ASSY,LH VFM300	1	INC.2,4-13,20,21,23,24
-	216G0-50461		LIFT CYLINDER ASSY,LH VFM325	1	INC.2,4-13,20,21,23,24
-	216G0-50471		LIFT CYLINDER ASSY,LH VFM330	1	INC.2,4-13,20,21,23,24
-	216G0-50481		LIFT CYLINDER ASSY,LH VFM350	1	INC.2,4-13,20,21,23,24
-	216G0-50491		LIFT CYLINDER ASSY,LH VFM366	1	INC.2,4-13,20,21,23,24
-	216G0-50501		LIFT CYLINDER ASSY,LH VFM370	1	INC.2,4-13,20,21,23,24
-	216G0-50511		LIFT CYLINDER ASSY,LH VFM375	1	INC.2,4-13,20,21,23,24
-	216G0-50521		LIFT CYLINDER ASSY,LH VFM400	1	INC.2,4-13,20-24
-	216G0-50531		LIFT CYLINDER ASSY,LH VFM425	1	INC.2,4-13,20-24
-	216G0-50541		LIFT CYLINDER ASSY,LH VFM450	1	INC.2,4-13,20-24
-	216G0-50551		LIFT CYLINDER ASSY,LH VFM475	1	INC.2,4-13,20-24
-	216G0-50561		LIFT CYLINDER ASSY,LH VFM500	1	INC.2,4-13,20-24
-	216G0-50571		LIFT CYLINDER ASSY,LH VFM550	1	INC.2,4-13,20-24
-	216G0-50581		LIFT CYLINDER ASSY,LH VFM600	1	INC.2,4-13,20-24
-	516G5-51211		LIFT CYLINDER ASSY,LH VFM200	1	INC.2,4-13,20,21,23,24 CS35,FCS35,FCS45,FCS55
-	516G5-51221		LIFT CYLINDER ASSY,LH VFM225	1	INC.2,4-13,20,21,23,24 CS35,FCS35,FCS45,FCS55
-	516G5-51231		LIFT CYLINDER ASSY,LH VFM250	1	INC.2,4-13,20,21,23,24 CS35,FCS35,FCS45,FCS55
-	516G5-51241		LIFT CYLINDER ASSY,LH VFM270	1	INC.2,4-13,20,21,23,24 CS35,FCS35,FCS45,FCS55
-	516G5-51251		LIFT CYLINDER ASSY,LH VFM275	1	INC.2,4-13,20,21,23,24 CS35,FCS35,FCS45,FCS55
-	516G5-51201		LIFT CYLINDER ASSY,LH VFM300	1	INC.2,4-13,20,21,23,24 CS35,FCS35,FCS45,FCS55
-	516G5-51261		LIFT CYLINDER ASSY,LH VFM325	1	INC.2,4-13,20,21,23,24 CS35,FCS35,FCS45,FCS55
-	516G5-51271		LIFT CYLINDER ASSY,LH VFM330	1	INC.2,4-13,20,21,23,24 CS35,FCS35,FCS45,FCS55
-	516G5-51281		LIFT CYLINDER ASSY,LH VFM350	1	INC.2,4-13,20,21,23,24 CS35,FCS35,FCS45,FCS55
-	516G5-51291		LIFT CYLINDER ASSY,LH VFM366	1	INC.2,4-13,20,21,23,24 CS35,FCS35,FCS45,FCS55
-	516G5-51301		LIFT CYLINDER ASSY,LH VFM370	1	INC.2,4-13,20,21,23,24 CS35,FCS35,FCS45,FCS55

A: VFM81E (FB10-8) B: VFM81E (FB15-8) C: VFM81E (FB18-8)

Item No.	Part No.	Mark	Description		Req'd	Remarks : serial No.
A2	516G5-51311		LIFT CYLINDER ASSY,LH	VFM375	1	INC.2,4-13,20,21,23,24
						CS35,FCS35,FCS45,FCS55
-	516G5-51321		LIFT CYLINDER ASSY,LH	VFM400	1	INC.2,4-13,20-24
						CS35,FCS35,FCS45,FCS55
-	516G5-51331		LIFT CYLINDER ASSY,LH	VFM425	1	INC.2,4-13,20-24
						CS35,FCS35,FCS45,FCS55
-	516G5-51341		LIFT CYLINDER ASSY,LH	VFM450	1	INC.2,4-13,20-24
						CS35,FCS35,FCS45,FCS55
-	516G5-51351		LIFT CYLINDER ASSY,LH	VFM475	1	INC.2,4-13,20-24
						CS35,FCS35,FCS45,FCS55
-	516G5-51361		LIFT CYLINDER ASSY,LH	VFM500	1	INC.2,4-13,20-24
						CS35,FCS35,FCS45,FCS55
-	516G5-51371		LIFT CYLINDER ASSY,LH	VFM550	1	INC.2,4-13,20-24
						CS35,FCS35,FCS45,FCS55
-	516G5-51381		LIFT CYLINDER ASSY,LH	VFM600	1	INC.2,4-13,20-24
						CS35,FCS35,FCS45,FCS55
901	216G0-59801	K1	KIT,OVERHAUL		2	INC.5,7-11,19 & etc.
-	516G5-59801	K1	KIT,OVERHAUL		2	INC.5,7-11,19 & etc.
						CS35,FCS35,FCS45,FCS55
1	216G0-50611		BODY,CYLINDER,RH	VFM200	1	
-	216G0-50621		BODY,CYLINDER,RH	VFM225	1	
-	216G0-50631		BODY,CYLINDER,RH	VFM250	1	
-	216G0-50641		BODY,CYLINDER,RH	VFM270	1	
-	216G0-50651		BODY,CYLINDER,RH	VFM275	1	
-	216G0-50601		BODY,CYLINDER,RH	VFM300	1	
-	216G0-50661		BODY,CYLINDER,RH	VFM325	1	
-	216G0-50671		BODY,CYLINDER,RH	VFM330	1	
-	216G0-50681		BODY,CYLINDER,RH	VFM350	1	
-	234A0-50601		BODY,CYLINDER,RH	VFM366	1	
-	216G0-50701		BODY,CYLINDER,RH	VFM370	1	
-	216G0-50711		BODY,CYLINDER,RH	VFM375	1	
-	216G0-50721		BODY,CYLINDER,RH	VFM400	1	
-	216G0-50731		BODY,CYLINDER,RH	VFM425	1	
-	216G0-50741		BODY,CYLINDER,RH	VFM450	1	
-	216G0-50751		BODY,CYLINDER,RH	VFM475	1	
-	216G0-50761		BODY,CYLINDER,RH	VFM500	1	
-	216G0-50771		BODY,CYLINDER,RH	VFM550	1	
-	216G0-50781		BODY,CYLINDER,RH	VFM600	1	
2	216G0-50811		BODY,CYLINDER,LH	VFM200	1	
-	216G0-50821		BODY,CYLINDER,LH	VFM225	1	
-	216G0-50831		BODY,CYLINDER,LH	VFM250	1	
-	216G0-50841		BODY,CYLINDER,LH	VFM270	1	
-	216G0-50851		BODY,CYLINDER,LH	VFM275	1	
-	216G0-50801		BODY,CYLINDER,LH	VFM300	1	
-	216G0-50861		BODY,CYLINDER,LH	VFM325	1	
-	216G0-50871		BODY,CYLINDER,LH	VFM330	1	
-	216G0-50881		BODY,CYLINDER,LH	VFM350	1	
-	234A0-50801		BODY,CYLINDER,LH	VFM366	1	
-	216G0-50901		BODY,CYLINDER,LH	VFM370	1	
-	216G0-50911		BODY,CYLINDER,LH	VFM375	1	

A: VFM81E (FB10-8) B: VFM81E (FB15-8) C: VFM81E (FB18-8)

Item No.	Part No.	Mark	Description		Req'd	Remarks : serial No.
2	216G0-50921		BODY,CYLINDER,LH	VFM400	1	
-	216G0-50931		BODY,CYLINDER,LH	VFM425	1	
-	216G0-50941		BODY,CYLINDER,LH	VFM450	1	
-	216G0-50951		BODY,CYLINDER,LH	VFM475	1	
-	216G0-50961		BODY,CYLINDER,LH	VFM500	1	
-	216G0-50971		BODY,CYLINDER,LH	VFM550	1	
-	216G0-50981		BODY,CYLINDER,LH	VFM600	1	
3	211F0-51511		ROD,PISTON,RH	VFM200	1	
-	211F0-51521		ROD,PISTON,RH	VFM225	1	
-	211F0-51531		ROD,PISTON,RH	VFM250	1	
-	211F0-51541		ROD,PISTON,RH	VFM270	1	
-	211F0-51551		ROD,PISTON,RH	VFM275	1	
-	211F0-51501		ROD,PISTON,RH	VFM300	1	
-	211F0-51561		ROD,PISTON,RH	VFM325	1	
-	211F0-51571		ROD,PISTON,RH	VFM330	1	
-	211F0-51581		ROD,PISTON,RH	VFM350	1	
-	211F0-51591		ROD,PISTON,RH	VFM366	1	
-	211F0-51601		ROD,PISTON,RH	VFM370	1	
-	211F0-51611		ROD,PISTON,RH	VFM375	1	
-	211F0-51621		ROD,PISTON,RH	VFM400	1	
-	211F0-51631		ROD,PISTON,RH	VFM425	1	
-	211F0-51641		ROD,PISTON,RH	VFM450	1	
-	211F0-51651		ROD,PISTON,RH	VFM475	1	
-	211F0-51661		ROD,PISTON,RH	VFM500	1	
-	211F0-51671		ROD,PISTON,RH	VFM550	1	
-	211F0-51681		ROD,PISTON,RH	VFM600	1	
4	211F0-51711		ROD,PISTON,LH	VFM200	1	
-	211F0-51721		ROD,PISTON,LH	VFM225	1	
-	211F0-51731		ROD,PISTON,LH	VFM250	1	
-	211F0-51741		ROD,PISTON,LH	VFM270	1	
-	211F0-51751		ROD,PISTON,LH	VFM275	1	
-	211F0-51701		ROD,PISTON,LH	VFM300	1	
-	211F0-51761		ROD,PISTON,LH	VFM325	1	
-	211F0-51771		ROD,PISTON,LH	VFM330	1	
-	211F0-51781		ROD,PISTON,LH	VFM350	1	
-	211F0-51791		ROD,PISTON,LH	VFM366	1	
-	211F0-51801		ROD,PISTON,LH	VFM370	1	
-	211F0-51811		ROD,PISTON,LH	VFM375	1	
-	211F0-51821		ROD,PISTON,LH	VFM400	1	
-	211F0-51831		ROD,PISTON,LH	VFM425	1	
-	211F0-51841		ROD,PISTON,LH	VFM450	1	
-	211F0-51851		ROD,PISTON,LH	VFM475	1	
-	211F0-51861		ROD,PISTON,LH	VFM500	1	
-	211F0-51871		ROD,PISTON,LH	VFM550	1	
-	211F0-51881		ROD,PISTON,LH	VFM600	1	
5	22580-53321	*	WEARING		2	
6	216G0-53011		CAP,CYLINDER		2	
7	210F8-42631	*	O RING		2	
-	510F5-54021	*	O RING		2	CS35,FCS35,FCS45,FCS55
8	214A0-53681	*	RING,BACK UP		2	

A: VFM81E (FB10-8) B: VFM81E (FB15-8) C: VFM81E (FB18-8)

Item No.	Part No.	Mark	Description		Req'd	Remarks : serial No.
9	23658-52051	*	PACKING		2	
-	59565-54301	*	PACKING		2	CS35,FCS35,FCS45,FCS55
10	23658-52061	*	RING,BACK UP		2	
11	210F0-53691	*	SEAL,DUST		2	
-	510F5-54041	*	SEAL,DUST		2	CS35,FCS35,FCS45,FCS55
A3	216G0-53051		SLEEVE ASSY		2	INC.12,13
12	216G0-53061		SLEEVE		2	
13	22678-52021		BUSHING		2	
14	53658-43021		SLEEVE		1	(RH)
15	53658-43011		PISTON		1	(RH)
16	53658-43001		VALVE,CHECK		1	(RH)
17	53658-43031		SPRING		1	(RH)
18	53658-43041		PLUG		1	(RH)
19	03320-00340	*	O RING		1	(RH)
-	59595-56251	*	O RING		1	(RH)
						CS35,FCS35,FCS45,FCS55
20	234A0-52611		PLUG		2	
21	03190-00006		BALL		2	
22	210F0-53701		SPACER	VFM400-500	1	
-	210F0-53701		SPACER	VFM550,600	2	
23	23200-50811		FITTING		1	(LH)
24	03320-00180		O RING		1	(LH)
-	59595-54381		O RING		1	(LH)
						CS35,FCS35,FCS45,FCS55
25	23200-50841		NUT		2	(LH)
26	23648-50161		PLATE,KEY		1	(LH)
27	01184-10020		BOLT&WASHER		2	(LH)
28	01103-14040		BOLT		1	(RH)
29	02011-00014		WASHER		1	(RH)
A4	215E8-42171		SUPPORT ASSY	VFM200-375	2	INC.30,31
-	215E8-42171		SUPPORT ASSY	VFM400-600	4	INC.30,31
30	22N58-43011		SUPPORT	VFM200-375	2	
-	22N58-43011		SUPPORT	VFM400-600	4	
31	24868-42111		RUBBER	VFM200-375	2	
-	24868-42111		RUBBER	VFM400-600	4	
32	216G8-43161		U BOLT	VFM200-375	2	
-	216G8-43161		U BOLT	VFM400-600	4	
33	234A8-42561		NUT	VFM200-375	4	
-	234A8-42561		NUT	VFM400-600	8	
34	02000-20010		WASHER	VFM200-375	4	
-	02000-20010		WASHER	VFM400-600	8	
35	02010-20010		WASHER	VFM200-375	4	
-	02010-20010		WASHER	VFM400-600	8	
36	01402-00012		NUT	VFM200-375	2	
-	01402-00012		NUT	VFM400-600	4	
37	01120-12040		BOLT	VFM200-375	2	
-	01120-12040		BOLT	VFM400-600	4	
38	23917-42191		SHIM,T-1.0		5	
39	22679-43831		SHIM,T-0.2		5	
40	214A8-42661		BOLT		2	

FIG. 99 MAST PIPING [VFM81E]

(MD010530) ﾏｽﾄﾊﾟｲﾋﾟﾝｸﾞ

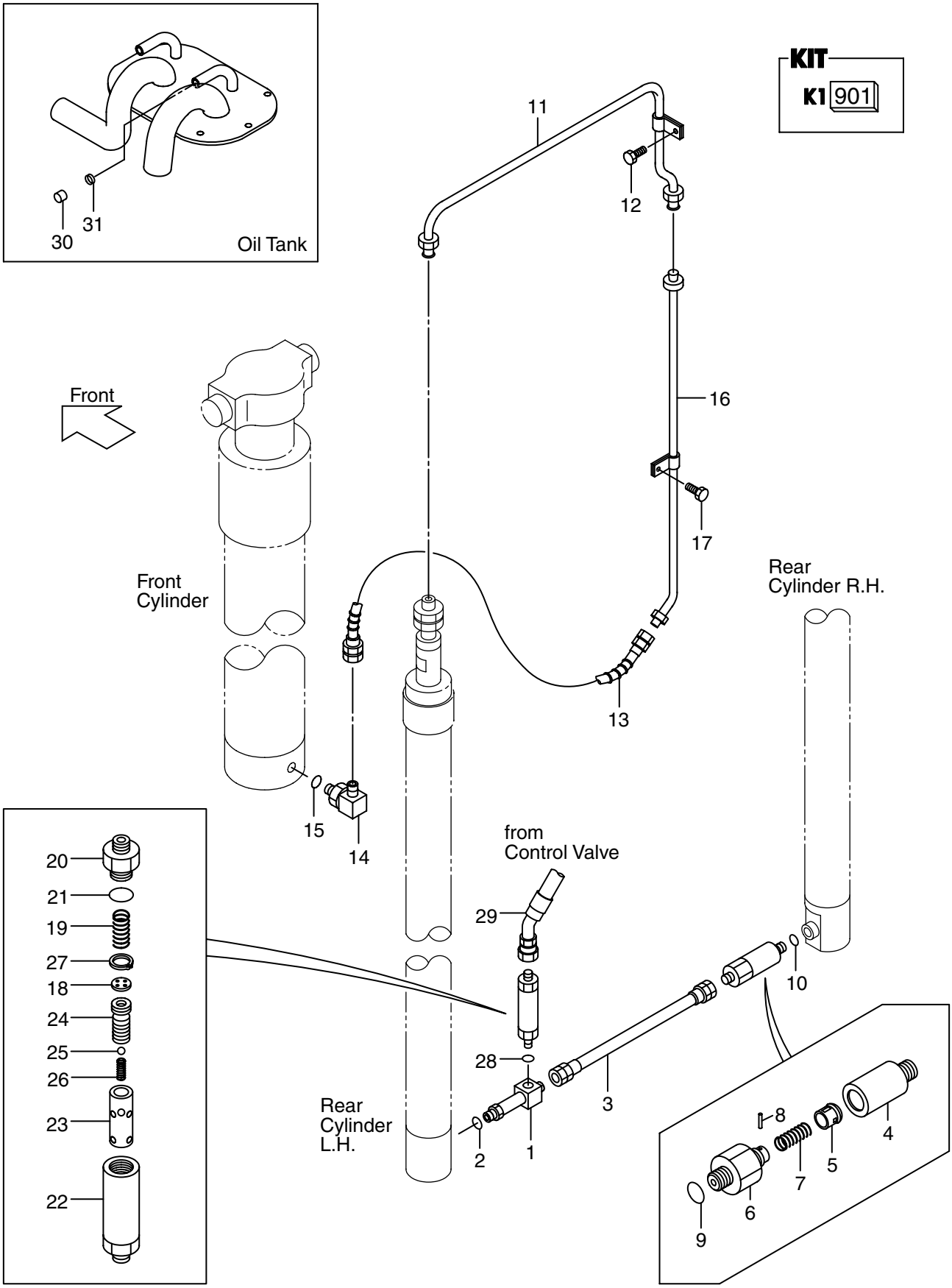

A: VFM81E (FB10-8) B: VFM81E (FB15-8) C: VFM81E (FB18-8)

Item No.	Part No.	Mark	Description		Req'd	Remarks : serial No.
901	216G0-59801	K1	KIT,OVERHAUL		1	INC.2,10 & etc.
-	216G0-59801	K1	KIT,OVERHAUL		1	INC.2,10 & etc.
						CS35,FCS35
-	516G5-59801	K1	KIT,OVERHAUL		1	INC.2,10 & etc.
						FCS45,FCS55
1	234A8-43051		THREE WAY		1	
2	03320-00140	*	O RING		1	
-	03320-00140	*	O RING		1	CS35,FCS35
-	63130-12971	*	O RING		1	FCS45,FCS55
3	277H8-42111		HOSE		1	
4	277H0-62111		ADAPTER		1	
A1	216G0-93201		SUB ASSY,CUT VALVE		1	INC.5-9
-	216G0-93201		SUB ASSY,CUT VALVE		1	INC.5-9
						CS35,FCS35
-	516G5-54201		SUB ASSY,CUT VALVE		1	INC.5-9
						FCS45,FCS55
5	NO PART NO.	#	PISTON		1	
6	NO PART NO.	#	FITTING		1	
7	234A8-42611		SPRING		1	
8	02270-01014		PIN,SPRING		1	
9	03320-00140		O RING		1	
-	03320-00140		O RING		1	CS35,FCS35
-	63130-12971		O RING		1	FCS45,FCS55
10	03320-00140	*	O RING		1	
-	03320-00140	*	O RING		1	CS35,FCS35
-	63130-12971	*	O RING		1	FCS45,FCS55
11	211F0-62301		PIPE		1	
12	01183-06016		BOLT&WASHER		2	
13	214A0-62151		HOSE		1	
-	57415-51201		HOSE		1	CS35,FCS35,FCS45,FCS55
A2	229F0-91001		ELBOW ASSY		1	INC.14,15
-	229F0-91001		ELBOW ASSY		1	INC.14,15
						CS35,FCS35
-	529F5-54201		ELBOW ASSY		1	INC.14,15
						FCS45,FCS55
14	NO PART NO.	#	ELBOW		1	
15	03320-00240		O RING		1	
-	03320-00240		O RING		1	CS35,FCS35
-	529F5-54001		O RING		1	FCS45,FCS55
16	210F0-60211		PIPE	VFM200	1	
-	210F0-60221		PIPE	VFM225	1	
-	210F0-60231		PIPE	VFM250	1	
-	210F0-60241		PIPE	VFM270	1	
-	210F0-60251		PIPE	VFM275	1	
-	210F0-60201		PIPE	VFM300	1	
-	210F0-60261		PIPE	VFM325	1	
-	210F0-60271		PIPE	VFM330	1	
-	210F0-60281		PIPE	VFM350	1	
-	210F0-60291		PIPE	VFM366	1	
-	210F0-60301		PIPE	VFM370	1	

A: VFM81E (FB10-8) B: VFM81E (FB15-8) C: VFM81E (FB18-8)

Item No.	Part No.	Mark	Description		Req'd	Remarks : serial No.
16	210F0-60311		PIPE	VFM375	1	
-	210F0-60321		PIPE	VFM400	1	
-	210F0-60331		PIPE	VFM425	1	
-	210F0-60341		PIPE	VFM450	1	
-	210F0-60351		PIPE	VFM475	1	
-	210F0-60361		PIPE	VFM500	1	
-	210F0-60371		PIPE	VFM550	1	
-	210F0-60381		PIPE	VFM600	1	
17	01183-06016		BOLT&WASHER	VFM200-375	1	
-	01183-06016		BOLT&WASHER	VFM400-500	2	
-	01183-06016		BOLT&WASHER	VFM550,600	3	
A3	216G8-41001		REGULATOR ASSY		1	INC.18-27
18	NO PART NO.	#	PLATE		1	
19	27979-43101		SPRING		1	
20	NO PART NO.	#	FITTING		1	
21	03300-00280		O RING		1	
22	NO PART NO.	#	CASE		1	
23	NO PART NO.	#	SLEEVE		1	
24	NO PART NO.	#	PISTON		1	
25	24459-42951		BALL,NYLON		1	
26	214A8-44151		SPRING		1	
27	02110-00018		RING,SNAP		1	
28	03320-00180		O RING		1	
-	03320-00180		O RING		1	CS35,FCS35
-	59595-54381		O RING		1	FCS45,FCS55
29	281E0-42001		HOSE		1	
-	581E6-A2501		HOSE		1	LM
30	55593-62551		CAP		1	
31	04914-00019		CLIP		1	

PARTS NUMBER INDEX　部品番号索引表

部品番号 PARTS No.	図番号 FIG.NO.	部品番号 PARTS No.	図番号 FIG.NO.	部品番号 PARTS No.	図番号 FIG.NO.	部品番号 PARTS No.	図番号 FIG.NO.
B-B6111-35039	88	B-30121-45018	89	C-52-11036-24606	22	R-402-30821-02	68
B-B6111-35039	89	B-30121-65065	78	C-52-11036-25160	22	R-402-30843	67
B-B6111-35049	88	B-30131-03003	78	C-52-11036-54070	22	R-402-30843	68
B-B6111-35049	89	B-30131-03003	79	C-52-11036-54540	22	R-402-30843	68
B-B6121-65003	79	B-30131-35017	88	C-52-11038-11002	22	R-402-30843	68
B-B6137-27001	78	B-30131-35017	89	C-52-11038-21002	22	R-402-30861	67
B-B6137-27001	79	B-30131-45018	88	C-52-11044-13300	22	R-402-30862	67
B-B6137-27101	78	B-30131-45018	89	C-52-11044-23300	22	R-402-30862	68
B-B6137-27101	79	B-30141-91049	88	C-52-11101-04111	22	R-402-30862	68
B-B6551-91008	88	B-30141-91049	89	C-52-11201-01270	22	R-402-30862	68
B-B6551-91008	89	B-30161-30033	79	C-52-11204-69010	22	R-402-30863-01	67
B-B6567-32601	88	B-30161-35033	89	C-52-12503-34500	22	R-402-30863-02	67
B-B6567-32701	88	B-30161-45046	88	C-90-0527-0616	22	R-402-30863-02	68
B-B6567-32801	88	B-30161-45046	89	C-90-5522-0140	22	R-402-30863-02	68
B-B6567-32901	88	B-30161-91446	79	C-90-6000-0731	22	R-402-30863-02	68
B-B6567-33001	88	B-30161-91489	79	C-90-6200-0700	22	R-402-30865	68
B-B6567-33101	88	B-30161-91773	88	C-90-9200-0800	22	R-402-30865	68
B-B6567-33201	88	B-30161-91786	89	R-022-20044	67	R-402-30865	68
B-B6567-33301	88	B-30191-30003	79	R-022-20044	68	R-402-30893	67
B-B6567-33401	88	B-30191-30025	78	R-022-20044	68	R-402-30896-01	67
B-B6567-33501	88	B-30191-35025	88	R-022-20044	68	R-402-30905-02	62
B-B6567-33601	88	B-30191-35031	89	R-022-20046	67	R-402-30905-03	63
B-B6567-33701	88	B-3045A-00020	88	R-022-20046	68	R-402-30905-04	64
B-B6567-33801	88	B-3045A-00022	89	R-022-20046	68	R-402-30905-05	65
B-B6567-33901	88	B-3045B-00026	88	R-022-20046	68	R-402-30908-01	67
B-B6567-34001	88	B-3045B-00026	89	R-022-25072	67	R-402-30910	67
B-B6567-34101	88	B-30461-40038	79	R-023-06632-41	62	R-402-30963-06	67
B-B6567-34201	88	B-30461-45039	88	R-023-06632-41	63	R-402-30963-07	67
B-B6567-34301	88	B-30461-45039	89	R-023-06632-41	64	R-402-31025	67
B-B6567-34401	88	B-30961-03012	78	R-023-06632-41	65	R-402-31035	67
B-B6567-82601	89	B-30961-03512	88	R-026-50103	62	R-402-31038	67
B-B6567-82801	89	B-95112-05500	78	R-026-50103	63	R-402-31047	67
B-B6567-83001	89	B-95121-06500	78	R-026-50103	64	R-402-31047	68
B-B6567-83601	89	B-95151-03500	88	R-026-50103	65	R-402-31047	68
B-B6577-08102	88	B-95151-03500	89	R-035-50721-02	66	R-402-31047	68
B-B6577-08202	88	B-95713-05500	78	R-036-10218	67	R-402-31057	67
B-B6577-08302	88	B-95713-05500	79	R-036-10218	68	R-402-31069	67
B-B6577-08402	88	C-K2-11053-83011	22	R-036-10218	68	R-402-31092-02	62
B-B6577-08402	89	C-K2-11053-83021	22	R-036-10218	68	R-402-31092-02	63
B-B6577-08502	88	C-11452-7P1-D	81	R-036-15510-14	68	R-402-31092-02	64
B-B6577-08602	88	C-11452-7P1-D	82	R-036-15510-14	68	R-402-31092-02	65
B-B6577-08602	89	C-11452-7P2-D	81	R-036-15510-14	68	R-402-31092-03	62
B-B6577-08702	88	C-11452-7P2-D	82	R-400-50252-09	67	R-402-31092-03	63
B-B6577-08802	88	C-52-10901-52264	22	R-400-50976-01	66	R-402-31092-03	64
B-B6577-08802	89	C-52-10901-64550	22	R-400-50976-01	67	R-402-31092-03	65
B-B6577-08902	88	C-52-10901-64560	22	R-400-50976-01	68	R-402-31094	67
B-B6577-09002	88	C-52-10906-04160	22	R-400-50976-01	68	R-402-31094	68
B-B6577-09102	88	C-52-10910-05150	22	R-400-50976-01	68	R-402-31094	68
B-B6577-09202	88	C-52-10927-04130	22	R-402-00710-12	61	R-402-31094	68
B-B6577-09302	88	C-52-11001-02310	22	R-402-30621	67	R-402-31115-02	68
B-B6577-09402	88	C-52-11003-02210	22	R-402-30621	68	R-402-31115-02	68
B-B6577-09502	88	C-52-11003-02380	22	R-402-30621	68	R-402-31115-02	68
B-B6577-09502	89	C-52-11003-04010	22	R-402-30621	68	R-402-31159	67
B-B6577-09602	88	C-52-11003-05140	22	R-402-30789-14	68	R-402-31160-01	67
B-B6577-09702	88	C-52-11003-64530	22	R-402-30789-14	68	R-402-31160-02	67
B-B6577-09802	88	C-52-11005-44500	22	R-402-30789-14	68	R-402-31160-03	68
B-B6577-09902	88	C-52-11029-52000	22	R-402-30813-01	66	R-402-31160-03	68
B-30101-30148	78	C-52-11029-52120	22	R-402-30821-02	67	R-402-31160-03	68
B-30101-30148	79	C-52-11036-14606	22	R-402-30821-02	68	R-402-31165	67
B-30121-45018	88	C-52-11036-15160	22	R-402-30821-02	68	R-402-31165	68

PARTS NUMBER INDEX　部品番号索引表

部品番号 PARTS No.	図番号 FIG.NO.	部品番号 PARTS No.	図番号 FIG.NO.	部品番号 PARTS No.	図番号 FIG.NO.	部品番号 PARTS No.	図番号 FIG.NO.
R-402-31165	68	01033-06016	43	01120-10030	88	01400-00008	28
R-402-31165	68	01043-04010	5	01120-10030	89	01400-00008	42
R-402-31181-04	67	01043-04025	5	01120-12040	88	01400-00008	43
R-402-31181-05	67	01044-04006	14	01120-12040	89	01400-00008	49
R-402-31233	67	01100-04010	3	01120-12040	98	01400-00008	58
R-402-31252-02	67	01100-04010	3	01120-12040	98	01400-00008	59
R-402-31254-02	67	01100-04030	62	01170-06025	42	01400-00008	60
R-402-36501	62	01100-04030	63	01170-06025	43	01400-00010	47
R-402-36501	63	01100-04030	64	01183-05012	16	01400-00014	88
R-402-36501	64	01100-04030	65	01183-06012	70	01400-00014	89
R-402-36501	65	01100-06012	45	01183-06012	71	01400-00014	97
R-402-36501	66	01100-06020	45	01183-06012	72	01400-10010	39
R-402-36602	62	01100-08025	44	01183-06012	73	01400-10012	21
R-402-36602	63	01100-08050	49	01183-06016	45	01400-10012	31
R-402-36602	64	01100-12020	84	01183-06016	99	01400-10012	32
R-402-36602	65	01100-12020	93	01183-06016	99	01400-10012	33
R-402-36976	63	01100-14025	85	01183-06016	99	01400-10012	34
R-402-36976	64	01100-14025	85	01183-06016	99	01400-10014	36
R-402-36976	65	01100-14025	85	01183-08012	3	01400-10014	36
R-402-36976	68	01100-14025	85	01183-08012	9	01400-10014	37
R-402-36976	68	01100-14025	94	01183-08016	28	01402-00008	44
R-402-36976	68	01100-14025	94	01183-08016	54	01402-00010	28
R-402-37168	62	01100-14025	94	01183-08020	16	01402-00010	46
R-402-37168	63	01100-14025	94	01183-08020	54	01402-00010	83
R-402-37168	64	01100-14030	85	01183-08025	54	01402-00010	88
R-402-37168	65	01100-14030	85	01183-08025	77	01402-00010	89
R-402-37168	67	01100-14030	85	01184-10016	20	01402-00010	92
R-402-37179	62	01100-14030	85	01184-10020	13	01402-00012	88
R-402-37179	62	01100-14030	85	01184-10020	15	01402-00012	89
R-402-37179	63	01100-14030	94	01184-10020	98	01402-00012	98
R-402-37179	63	01100-14030	94	01184-10025	54	01402-00012	98
R-402-37179	64	01100-14030	94	01184-10030	47	01402-00014	23
R-402-37179	64	01100-14030	94	01184-12035	41	01402-00022	27
R-402-37179	65	01100-14030	94	01185-06012	46	01402-00022	39
R-402-37179	65	01100-14035	85	01185-06012	47	01407-00024	39
R-402-37179	67	01100-14035	94	01185-06016	26	01412-00030	28
R-402-65004-01	61	01100-14040	29	01185-08012	11	01412-10016	27
R-402-65154	67	01100-14070	50	01185-08012	14	01412-10016	28
R-402-65308	67	01100-16016	88	01185-08016	2	01412-10016	28
R-402-65308	68	01100-16016	89	01185-08016	56	01412-10020	39
R-402-65308	68	01100-16016	97	01185-08020	8	02000-00004	3
R-402-65308	68	01100-16060	97	01185-10020	51	02000-00004	3
R-403-21988	61	01100-16060	97	01186-10016	75	02000-00004	28
W-K2PK-M	83	01100-16065	97	01186-10020	50	02000-00005	26
W-K2PK-M	92	01103-08028	53	01186-10025	52	02000-00005	70
0F05X-X0294	17	01103-10020	97	01186-10025	61	02000-00005	71
01030-04008	28	01103-10025	20	01186-12030	40	02000-00005	72
01030-04020	4	01103-10040	39	01200-08063	11	02000-00005	73
01030-04020	5	01103-10045	84	01400-00006	8	02000-00006	10
01030-05008	28	01103-10045	93	01400-00006	15	02000-00006	18
01030-05014	16	01103-12055	20	01400-00006	15	02000-00006	23
01030-05055	6	01103-12100	20	01400-00006	17	02000-00006	45
01030-05065	7	01103-14040	98	01400-00006	45	02000-00008	11
01030-06010	28	01103-14065	86	01400-00008	2	02000-00008	16
01030-06035	17	01103-14065	95	01400-00008	11	02000-00008	16
01030-06040	17	01103-20070	20	01400-00008	11	02000-00008	17
01030-08010	53	01106-10035	20	01400-00008	13	02000-00008	28
01032-04006	14	01110-30110	51	01400-00008	16	02000-00008	42
01033-05014	19	01120-10025	28	01400-00008	16	02000-00008	43
01033-06016	42	01120-10030	46	01400-00008	17	02000-00008	53

PARTS NUMBER INDEX　部品番号索引表

部品番号 PARTS No.	図番号 FIG.NO.	部品番号 PARTS No.	図番号 FIG.NO.	部品番号 PARTS No.	図番号 FIG.NO.	部品番号 PARTS No.	図番号 FIG.NO.
02000-00008	88	02011-00010	97	03320-00140	90	06702-60009	33
02000-00008	89	02011-00012	20	03320-00140	91	06711-45012	35
02000-00010	47	02011-00012	31	03320-00140	91	06712-60009	31
02000-00012	23	02011-00012	32	03320-00140	99	06712-60009	32
02000-00014	1	02011-00012	33	03320-00140	99	06712-60009	33
02000-00016	88	02011-00012	34	03320-00140	99	06731-00070	35
02000-00016	89	02011-00014	1	03320-00140	99	06801-60009	34
02000-00016	97	02011-00014	36	03320-00140	99	06841-60009	34
02000-00016	97	02011-00014	36	03320-00140	99	06842-60009	34
02000-00030	28	02011-00014	37	03320-00180	61	06843-60009	34
02000-04040	39	02011-00014	98	03320-00180	69	06844-60009	34
02000-20010	87	02011-00020	20	03320-00180	69	06852-60009	34
02000-20010	96	02100-00035	88	03320-00180	90	09001-08043	97
02000-20010	98	02100-00035	89	03320-00180	91	09001-08047	97
02000-20010	98	02100-00035	97	03320-00180	98	09001-08051	89
02010-00004	3	02100-00035	97	03320-00180	99	09001-08053	97
02010-00004	3	02100-00040	97	03320-00180	99	09001-08055	89
02010-00006	8	02110-00018	90	03320-00240	99	09001-08055	97
02010-00006	45	02110-00018	91	03320-00240	99	09001-08057	97
02010-00008	2	02110-00018	99	03320-00290	61	09001-08061	89
02010-00008	11	02200-02016	45	03320-00340	98	09001-08061	97
02010-00008	13	02200-02020	53	03350-00160	25	09001-08065	89
02010-00008	16	02200-03030	88	04134-20303	69	09001-08065	89
02010-00008	16	02200-03030	89	04134-20404	69	09001-08067	97
02010-00008	17	02200-03030	97	04150-20404	61	09001-08067	97
02010-00008	28	02200-06055	28	04601-44072	76	09001-08071	89
02010-00008	42	02200-16010	70	04710-04028	75	09001-08071	97
02010-00008	43	02200-16010	71	04720-12020	8	09001-08075	89
02010-00008	49	02200-16010	72	04720-12020	8	09001-08075	97
02010-00008	53	02200-16010	73	04901-00100	28	09001-08075	97
02010-00008	58	02200-25020	47	04901-00100	80	09001-08077	89
02010-00008	59	02200-32032	27	04901-00100	86	09001-08077	97
02010-00008	60	02200-32032	28	04901-00100	95	09001-08081	89
02010-00008	88	02200-32032	28	04901-00160	28	09001-08083	89
02010-00008	89	02212-08020	20	04901-00191	28	09001-08083	97
02010-00010	38	02212-10025	20	04911-00018	76	09001-08085	89
02010-00012	84	02242-06055	20	04911-00018	90	09001-08085	89
02010-00012	93	02262-10030	47	04911-00018	90	09001-08089	97
02010-00014	29	02270-01014	90	04911-00018	90	09001-08093	89
02010-00014	50	02270-01014	91	04911-00021	91	09001-08093	97
02010-00014	85	02270-01014	99	04911-00021	91	09001-08097	89
02010-00014	85	02432-01008	82	04911-00021	91	09001-08099	97
02010-00014	86	03000-06206	20	04911-00021	91	09001-08103	89
02010-00014	94	03000-06208	20	04913-10200	15	09001-08103	97
02010-00014	94	03000-06211	20	04913-10200	15	09001-08107	89
02010-00014	95	03000-06305	20	04913-10200	16	09001-08113	89
02010-00016	88	03000-06307	20	04913-11200	3	09001-08115	97
02010-00016	89	03071-30206	28	04913-11200	43	09001-08123	89
02010-00016	97	03071-30213	21	04914-00016	76	09001-08125	97
02010-00016	97	03190-00006	98	04914-00016	90	09001-08133	89
02010-00030	51	03192-00012	21	04914-00016	90	10113-50112	20
02010-20010	98	03192-10012	21	04914-00019	75	10193-50032	20
02010-20010	98	03300-00210	20	04914-00019	99	110F3-52001	20
02010-20012	25	03300-00280	90	06001-45012	35	110F3-52011	20
02010-20012	86	03300-00280	91	06001-45012	35	116G3-22001	20
02010-20012	95	03300-00280	99	06002-45012	35	12163-82541	21
02011-00008	53	03310-00750	20	06002-45012	35	12193-50011	20
02011-00010	20	03310-00900	1	06701-45012	35	14354-12271	23
02011-00010	20	03320-00140	69	06702-60009	31	15413-52081	20
02011-00010	39	03320-00140	90	06702-60009	32	15573-42151	21

PARTS NUMBER INDEX　部品番号索引表

部品番号 PARTS No.	図番号 FIG.NO.	部品番号 PARTS No.	図番号 FIG.NO.	部品番号 PARTS No.	図番号 FIG.NO.	部品番号 PARTS No.	図番号 FIG.NO.
15583-82601	20	20A78-52831	78	210F8-10522	83	211F0-50441	97
17P12-60201	11	20A78-52831	79	210F8-10522	92	211F0-50451	97
17P12-60601	12	20A78-52941	78	210F8-10532	83	211F0-50461	97
171A2-62191	16	20A98-20201	84	210F8-10532	92	211F0-50471	97
171A2-62271	16	20113-50181	20	210F8-10572	83	211F0-50481	97
173A2-65121	17	20114-30081	28	210F8-10572	92	211F0-51501	98
177H2-62211	16	20114-30091	28	210F8-10582	83	211F0-51511	98
177H3-22021	20	20114-30091	28	210F8-10582	92	211F0-51521	98
177H3-22051	20	20224-30061	28	210F8-10592	83	211F0-51531	98
17912-52141	62	20803-71081	22	210F8-10592	92	211F0-51541	98
17912-52141	63	209K2-42021	6	210F8-10602	83	211F0-51551	98
17912-52141	64	209K2-43001	26	210F8-10602	92	211F0-51561	98
17912-52141	65	209K2-43001	52	210F8-42631	98	211F0-51571	98
181E2-50002	20	209K4-12551-C	24	210H8-10532	83	211F0-51581	98
181E2-50202	20	210B8-10502	83	210H8-10532	92	211F0-51591	98
181E3-22001	20	210B8-10502	83	210H8-10542	83	211F0-51601	98
181E3-22011	20	210B8-10502	92	210H8-10542	92	211F0-51611	98
181E3-22021	20	210B8-10502	92	210H8-10552	83	211F0-51621	98
181E3-22051	20	210B8-10512	83	210H8-10552	92	211F0-51631	98
181E3-22211	20	210B8-10512	92	210H8-10612	83	211F0-51641	98
181E3-52001	20	210B8-10522	83	210H8-10612	92	211F0-51651	98
181E7-10001	61	210B8-10522	92	210H8-10622	83	211F0-51661	98
20A78-10601	83	210F0-50511	97	210H8-10622	92	211F0-51671	98
20A78-10601	83	210F0-50521	97	210H8-10632	83	211F0-51681	98
20A78-10601	92	210F0-53691	98	210H8-10632	92	211F0-51701	98
20A78-10601	92	210F0-53701	98	210H8-10642	83	211F0-51711	98
20A78-10611	83	210F0-53701	98	210H8-10642	92	211F0-51721	98
20A78-10611	92	210F0-60201	99	211F0-50101	97	211F0-51731	98
20A78-10621	83	210F0-60211	99	211F0-50111	97	211F0-51741	98
20A78-10621	92	210F0-60221	99	211F0-50121	97	211F0-51751	98
20A78-10631	83	210F0-60231	99	211F0-50131	97	211F0-51761	98
20A78-10631	92	210F0-60241	99	211F0-50141	97	211F0-51771	98
20A78-10641	83	210F0-60251	99	211F0-50151	97	211F0-51781	98
20A78-10641	92	210F0-60261	99	211F0-50161	97	211F0-51791	98
20A78-10651	83	210F0-60271	99	211F0-50171	97	211F0-51801	98
20A78-10651	92	210F0-60281	99	211F0-50181	97	211F0-51811	98
20A78-20201	84	210F0-60291	99	211F0-50191	97	211F0-51821	98
20A78-40701	88	210F0-60301	99	211F0-50201	97	211F0-51831	98
20A78-40711	88	210F0-60311	99	211F0-50211	97	211F0-51841	98
20A78-40721	88	210F0-60321	99	211F0-50221	97	211F0-51851	98
20A78-40731	88	210F0-60331	99	211F0-50231	97	211F0-51861	98
20A78-40741	88	210F0-60341	99	211F0-50241	97	211F0-51871	98
20A78-40751	88	210F0-60351	99	211F0-50251	97	211F0-51881	98
20A78-40761	88	210F0-60361	99	211F0-50261	97	211F0-62301	99
20A78-40771	88	210F0-60371	99	211F0-50271	97	211F0-82551	97
20A78-40781	88	210F0-60381	99	211F0-50281	97	211F8-22201	84
20A78-40791	88	210F3-72001	22	211F0-50301	97	211F8-22201	93
20A78-40801	88	210F6-12441	50	211F0-50311	97	211F8-22211	84
20A78-40811	88	210F6-12441	86	211F0-50321	97	211F8-22211	93
20A78-40821	88	210F6-12441	95	211F0-50331	97	211F8-22221	86
20A78-40831	88	210F8-02102	86	211F0-50341	97	211F8-22221	86
20A78-40841	88	210F8-02102	95	211F0-50351	97	211F8-22221	95
20A78-40851	88	210F8-10502	83	211F0-50361	97	211F8-22221	95
20A78-40861	88	210F8-10502	92	211F0-50371	97	211F8-22231	86
20A78-40871	88	210F8-10512	83	211F0-50381	97	211F8-22231	86
20A78-40881	88	210F8-10512	83	211F0-50391	97	211F8-22231	95
20A78-43801	88	210F8-10512	83	211F0-50401	97	211F8-22231	95
20A78-43801	89	210F8-10512	92	211F0-50411	97	211F8-22261	84
20A78-43811	88	210F8-10512	92	211F0-50421	97	211F8-22261	86
20A78-43811	89	210F8-10512	92	211F0-50431	97	211F8-22261	86

PARTS NUMBER INDEX　部品番号索引表

部品番号 PARTS No.	図番号 FIG.NO.	部品番号 PARTS No.	図番号 FIG.NO.	部品番号 PARTS No.	図番号 FIG.NO.	部品番号 PARTS No.	図番号 FIG.NO.
211F8-22261	86	214L7-62261	61	216G0-50701	98	216G7-40022	72
211F8-22261	93	215E8-42171	98	216G0-50711	98	216G7-40022	73
211F8-22261	95	215E8-42171	98	216G0-50721	98	216G7-40032	71
211F8-22261	95	215T0-83001	97	216G0-50731	98	216G7-40032	72
211F8-22271	84	215T0-83001	97	216G0-50741	98	216G7-40032	73
211F8-22271	86	215T0-83021	97	216G0-50751	98	216G7-40042	72
211F8-22271	86	215T0-83021	97	216G0-50761	98	216G7-40042	73
211F8-22271	86	216B8-10301	83	216G0-50771	98	216G7-42001	70
211F8-22271	93	216B8-10301	92	216G0-50781	98	216G7-42011	71
211F8-22271	95	216B8-10311	83	216G0-50801	98	216G7-42011	72
211F8-22271	95	216B8-10311	92	216G0-50811	98	216G7-52051	75
21237-52051	75	216B8-10321	83	216G0-50821	98	216G7-52201	75
21237-52062	75	216B8-10321	92	216G0-50831	98	216G8-02001	86
21279-12001	82	216G0-50201	98	216G0-50841	98	216G8-02001	95
21279-12011	82	216G0-50211	98	216G0-50851	98	216G8-10301	83
214A0-53681	98	216G0-50221	98	216G0-50861	98	216G8-10301	92
214A0-62151	99	216G0-50231	98	216G0-50871	98	216G8-10311	83
214A0-82831	97	216G0-50241	98	216G0-50881	98	216G8-10311	92
214A2-42141	81	216G0-50251	98	216G0-50901	98	216G8-10321	83
214A2-42621	50	216G0-50261	98	216G0-50911	98	216G8-10321	92
214A3-02001	22	216G0-50271	98	216G0-50921	98	216G8-10331	83
214A4-12161	23	216G0-50281	98	216G0-50931	98	216G8-10331	92
214A5-22001	45	216G0-50291	98	216G0-50941	98	216G8-10341	83
214A5-22051	45	216G0-50301	98	216G0-50951	98	216G8-10341	92
214A5-22181	45	216G0-50311	98	216G0-50961	98	216G8-10351	83
214A5-22191	45	216G0-50321	98	216G0-50971	98	216G8-10351	92
214A5-52121	49	216G0-50331	98	216G0-50981	98	216G8-10361	83
214A5-52131	49	216G0-50341	98	216G0-53011	98	216G8-10361	92
214A5-52241	49	216G0-50351	98	216G0-53051	98	216G8-10371	83
214A6-42252	52	216G0-50361	98	216G0-53061	98	216G8-10371	92
214A6-42252	52	216G0-50371	98	216G0-59801	98	216G8-10381	83
214A6-42771	26	216G0-50381	98	216G0-59801	99	216G8-10381	92
214A6-42781	12	216G0-50401	98	216G0-59801	99	216G8-10391	83
214A6-42781	26	216G0-50411	98	216G0-93201	90	216G8-10391	92
214A7-42071	70	216G0-50421	98	216G0-93201	91	216G8-10401	83
214A7-42071	70	216G0-50431	98	216G0-93201	99	216G8-10401	92
214A7-42071	71	216G0-50441	98	216G0-93201	99	216G8-10411	83
214A7-42071	71	216G0-50451	98	216G2-40731	4	216G8-10411	92
214A7-42071	71	216G0-50461	98	216G3-02051	21	216G8-10421	83
214A7-42071	72	216G0-50471	98	216G3-02051	21	216G8-10421	92
214A7-42071	72	216G0-50481	98	216G3-02061	21	216G8-10431	83
214A7-42071	72	216G0-50491	98	216G3-02061	21	216G8-10431	92
214A7-42071	72	216G0-50501	98	216G4-12091	26	216G8-10441	83
214A7-42071	73	216G0-50511	98	216G4-12101	23	216G8-10441	92
214A7-42071	73	216G0-50521	98	216G4-12111	23	216G8-12101	83
214A7-42071	73	216G0-50531	98	216G4-12251	25	216G8-12101	92
214A7-42071	73	216G0-50541	98	216G4-12251	86	216G8-12931	83
214A7-42071	73	216G0-50551	98	216G4-12251	95	216G8-12931	92
214A7-42181	74	216G0-50561	98	216G4-12681-C	24	216G8-22201	85
214A7-42181	74	216G0-50571	98	216G4-12711-C	24	216G8-22201	94
214A7-42181	74	216G0-50581	98	216G6-43231	38	216G8-22302	85
214A7-42181	74	216G0-50601	98	216G6-43231	49	216G8-22302	94
214A7-42191	74	216G0-50611	98	216G6-43561	52	216G8-22312	85
214A7-42201	74	216G0-50621	98	216G7-32041	69	216G8-22312	94
214A8-11001	83	216G0-50631	98	216G7-40012	70	216G8-22322	85
214A8-11001	92	216G0-50641	98	216G7-40012	71	216G8-22322	94
214A8-42661	98	216G0-50651	98	216G7-40012	72	216G8-22332	85
214A8-44151	90	216G0-50661	98	216G7-40012	73	216G8-22332	94
214A8-44151	91	216G0-50671	98	216G7-40022	70	216G8-22342	85
214A8-44151	99	216G0-50681	98	216G7-40022	71	216G8-22342	94

PARTS NUMBER INDEX　部品番号索引表

部品番号 PARTS No.	図番号 FIG.NO.	部品番号 PARTS No.	図番号 FIG.NO.	部品番号 PARTS No.	図番号 FIG.NO.	部品番号 PARTS No.	図番号 FIG.NO.
216G8-33361	86	218G8-45771	97	22N58-52851	79	230C5-55061	49
216G8-33361	95	218G8-45811	88	22N58-52861	78	230C5-55071	49
216G8-33371	86	218G8-45831	97	22N58-52861	79	230C5-55081	49
216G8-33371	95	218G8-45851	97	22N59-12191	82	230C5-55101	49
216G8-33401	86	218G8-45891	88	22018-30121	84	230C5-55111	49
216G8-33401	95	218G8-45931	97	22018-30121	93	230C5-55121	49
216G8-41001	90	218G8-45971	88	22018-30261	84	230R9-12211	81
216G8-41001	91	218G8-46011	97	22018-30261	93	23200-50811	98
216G8-41001	99	218G8-46031	88	22018-30304	84	23200-50841	98
216G8-42031	88	218G8-46031	97	22018-30304	93	23235-40091	46
216G8-42031	97	218G8-46051	88	221A2-42031	53	23255-42101	47
216G8-42031	97	218G8-46091	97	22118-40181	88	234A0-50601	98
216G8-43151	88	218G8-46131	88	22118-40181	89	234A0-50801	98
216G8-43151	89	218G8-46151	97	22118-40181	97	234A0-52611	98
216G8-43161	98	218G8-46151	97	22192-42411	8	234A6-43121	55
216G8-43161	98	218G8-46171	97	22192-42411	8	234A7-40052	73
216G8-52201	80	218G8-46211	88	22194-32222	28	234A7-42011	73
216G8-52201	80	218G8-46211	88	22194-32361	28	234A8-41101	90
216G8-52301	80	218G8-46271	88	22199-12401	28	234A8-41101	91
216G8-52311	86	218G8-46271	97	22199-12401	78	234A8-42561	38
216G8-52311	95	218G8-46331	88	22199-12401	79	234A8-42561	98
216G8-52321	86	218G8-46351	88	22199-12401	80	234A8-42561	98
216G8-52321	95	218G8-46351	88	222A2-42031	14	234A8-42571	86
216G8-52501	78	218G8-46351	97	222A2-42031	26	234A8-42571	95
216G9-12062	82	218G8-46431	97	222A5-52111	49	234A8-42611	90
216H3-92281	70	218G8-46471	88	222A9-32011	44	234A8-42611	91
216H3-92281	71	218G8-46511	97	222A9-32011	44	234A8-42611	99
216H3-92281	72	218G8-46551	88	22216-30051	51	234A8-43051	99
216H3-92281	73	218G8-46591	97	22256-42001	8	23453-02071	21
217M2-12221	76	218G8-46631	88	22256-42001	8	23453-02071	28
217M2-12221	76	218G8-46711	88	224G5-42061	47	23453-02091	21
217M2-12221	76	218G8-46791	88	224W4-32171	39	23453-02131	28
218G0-40401	95	218G8-46791	97	224W4-32341	39	23453-79801	22
218G0-40411	95	218G8-46951	97	224W4-32351	39	23457-42041	71
218G0-40421	95	218G8-46971	88	22439-12031	82	23457-42041	72
218G0-40431	95	218G8-47131	88	22513-02051	21	23457-42041	72
218G0-40441	95	22N48-52811	78	22517-40051	70	23458-52031	29
218G0-40451	95	22N48-52821	78	22517-40051	71	23647-40041	70
218G0-40461	95	22N48-52821	79	22517-40051	72	23648-50161	20
218G0-40471	95	22N54-12411	24	22517-40051	73	23648-50161	98
218G0-40481	95	22N54-13001	24	22518-40121	97	23652-12051	11
218G0-40491	95	22N54-32211	28	22574-32062	28	23652-12051	53
218G0-40501	95	22N54-33052	28	22574-32062	28	23653-02001	21
218G0-40511	95	22N56-44101	53	22578-32841	84	23654-32041	28
218G0-40521	95	22N56-44111	53	22578-32841	93	23654-34051	30
218G0-40531	95	22N56-44121	53	22580-53321	98	23654-34051	30
218G0-40541	95	22N56-44131	53	22678-52021	98	23654-34051	30
218G0-40551	95	22N56-44141	53	22679-43831	98	23657-42041	71
218G0-40561	95	22N56-44151	53	22717-40061	70	23657-42081	70
218G0-40571	95	22N58-43011	98	22717-40061	71	23657-42081	71
218G0-40581	95	22N58-43011	98	22717-40061	72	23657-42081	71
218G0-60101	93	22N58-45001	90	22717-40061	73	23657-42081	72
218G8-42501	88	22N58-45001	91	229F0-91001	99	23657-42081	72
218G8-42501	97	22N58-52701	78	229F0-91001	99	23657-42081	73
218G8-42511	88	22N58-52701	79	229F2-22151	75	23657-42081	73
218G8-42521	97	22N58-52831	78	229F6-42201	55	23657-42131	71
218G8-42701	88	22N58-52831	79	230C5-55021	49	23658-52051	98
218G8-42701	97	22N58-52841	78	230C5-55031	49	23658-52061	98
218G8-45611	97	22N58-52841	79	230C5-55041	49	23658-52101	78
218G8-45691	97	22N58-52851	78	230C5-55051	49	23658-52101	78

PARTS NUMBER INDEX　部品番号索引表

部品番号 PARTS No.	図番号 FIG.NO.	部品番号 PARTS No.	図番号 FIG.NO.	部品番号 PARTS No.	図番号 FIG.NO.	部品番号 PARTS No.	図番号 FIG.NO.
23658-52101	79	239A5-42161	47	24234-32411	28	25595-42411	47
23658-52101	79	239A5-42181	47	24234-32421	28	25595-42421	47
23659-42161	85	239A5-42191	47	24234-32501	29	25595-42491	47
23659-42161	94	239A5-42221	47	24235-42211	48	25596-42361	53
23678-40075	90	239A5-42251	47	24236-12572	29	256C5-62531	11
23678-40085	90	239A5-42271	47	24236-12581	29	256C5-62551	53
23678-40095	76	239A5-42281	47	243C4-12021	23	256C9-12291	81
23678-40100	90	239A5-42291	47	243C4-12101	23	25808-42481	97
23678-40110	90	239A5-42301	46	24328-40075	91	25908-44101	97
23678-40110	90	239A5-42301	46	24328-40085	91	25908-44111	97
23678-40110	90	239A5-42311	47	24328-40100	91	27B02-42601	14
23678-40110	90	239A5-42321	47	24328-40110	91	27B02-61102	14
23678-40125	90	239A5-50101	49	24328-40110	91	27B02-62901	17
23678-40130	90	239A9-12301	82	24328-40110	91	27B02-63001	17
23678-40135	90	239A9-92001	44	24328-40110	91	27B02-63001	17
23678-40140	90	239A9-92001	44	24328-40125	91	27B02-63001	17
23678-40140	90	239B5-42221	46	24328-40130	91	27P09-12001	81
23678-40150	90	23917-42191	98	24328-40135	91	27P09-12021	81
23678-40155	90	242F6-80101	59	24328-40140	91	27P11-00201	1
23678-40160	90	242F6-82041	58	24328-40140	91	27P11-00301	2
23678-40160	90	242F6-82041	59	24328-40150	91	27P11-00401	2
23678-40160	90	242F6-82041	60	24328-40155	91	27P11-00411	2
23678-40165	90	242F6-82051	58	24328-40160	91	27P12-42001	3
23678-40165	90	242F6-82051	59	24328-40160	91	27P12-42011	14
23678-40175	90	242F6-82051	60	24328-40160	91	27P12-42021	3
23678-40180	90	242F6-82081	58	24328-40165	91	27P12-42071	3
23678-40190	90	242F6-82081	59	24328-40165	91	27P12-42211	62
23678-40190	90	242F6-82081	60	24328-40175	91	27P12-42221	63
23678-40195	90	242F6-82091	58	24328-40180	91	27P12-42231	64
23678-40205	90	242F6-82091	59	24328-40190	91	27P12-42241	65
23678-40205	90	242F6-82091	60	24328-40190	91	27P12-60601	17
23678-40215	90	242F6-82101	58	24328-40195	91	27P12-60651	17
23678-40215	90	242F6-82101	59	24328-40205	91	27P12-60701	17
23678-40215	90	242F6-82101	60	24328-40205	91	27P12-60801	16
23678-40215	90	242F6-82111	58	24328-40215	91	27P12-62091	17
23678-40230	90	242F6-82111	59	24328-40215	91	27P12-62111	17
23678-40235	90	242F6-82111	60	24328-40215	91	27P12-62121	17
23678-40245	90	242F6-82121	58	24328-40215	91	27P12-62131	17
23678-40260	90	242F6-82121	59	24328-40230	91	27P12-62141	17
23678-40260	90	242F6-82121	60	24328-40235	91	27P12-62151	17
23678-40270	90	242F6-82141	58	24328-40245	91	27P12-62161	17
23678-40285	90	242F6-82141	59	24328-40260	91	27P12-62171	17
23678-40285	90	242F6-82141	60	24328-40260	91	27P12-62181	17
23678-40315	90	242F6-82271	58	24328-40270	91	27P12-62191	15
23678-40340	90	242F6-82271	59	24328-40285	91	27P12-62201	15
23679-43341	91	242F6-82271	60	24328-40285	91	27P12-62211	15
23679-45051	90	242F6-82281	58	24328-40315	91	27P12-62221	16
23775-42101	47	242F6-82281	59	24328-40340	91	27P12-62231	16
23870-52871	97	242F6-82281	60	24329-46201	91	27P12-62241	16
239A4-12112	23	24230-82211	97	24389-46021	97	27P12-62251	17
239A4-12131	23	24230-82221	97	24453-02061	21	27P12-62261	17
239A4-12402	23	24230-82231	97	24459-42951	90	27P12-62351	3
239A4-12411	23	24230-82291	97	24459-42951	91	27P12-62401	11
239A4-12431	23	24234-30551	27	24459-42951	99	27P12-62501	11
239A4-12441	23	24234-30551	28	24843-02011	21	27P12-62551	13
239A5-12501	42	24234-30561	28	24843-02062	21	27P12-62581	13
239A5-12521	42	24234-32123	28	24868-42111	98	27P12-62601	15
239A5-40642	47	24234-32231	28	24868-42111	98	27P12-62611	15
239A5-42101	47	24234-32231	28	25595-42311	47	27P12-62621	15
239A5-42121	47	24234-32241	28	25595-42382	47	27P12-62701	17

PARTS NUMBER INDEX　部品番号索引表

部品番号 PARTS No.	図番号 FIG.NO.	部品番号 PARTS No.	図番号 FIG.NO.	部品番号 PARTS No.	図番号 FIG.NO.	部品番号 PARTS No.	図番号 FIG.NO.
27P12-63001	11	27P19-12021	81	271F2-63011	10	277H2-42361	4
27P12-63011	11	27P19-12041	81	271F2-63011	18	277H2-42361	6
27P12-63201	16	27P19-12051	81	27142-62742	82	277H2-42371	4
27P14-10301-C	23	27P22-60941	10	27142-64002	62	277H2-42371	6
27P14-10301-C	24	27P22-60971	10	27142-64002	63	277H2-42701	63
27P14-12401	24	27P22-60971	10	27142-64002	64	277H2-42731	64
27P14-12501	26	27P22-60981	10	27142-64002	65	277H2-42741	65
27P14-12511	26	27P22-61341	10	272A2-42001	14	277H2-52011	20
27P14-12521	26	27P22-61371	10	27262-42101	46	277H2-60603	15
27P14-30101	28	27P22-61371	10	27292-62272	16	277H2-61001	18
27P14-30201	28	27P22-62101	17	273A9-12242	82	277H2-61241	10
27P14-30301	28	27P25-10351	40	27312-40751	17	277H2-61271	10
27P14-30311	28	27P26-40201	54	27312-40751	17	277H2-61281	10
27P14-30601	28	27P26-40211	54	27312-40751	17	277H2-61541	10
27P14-32131	28	27P29-12001	81	27319-10121	10	277H2-61571	10
27P14-32151	28	27P29-12021	81	27319-10121	10	277H2-62601	10
27P14-32221	28	27042-42351	8	27319-10131	10	277H2-62601	18
27P14-32241	28	27042-42351	8	27319-10131	10	277H2-62631	10
27P14-50101	39	27042-42421	8	27322-62461	17	277H2-62631	18
27P14-50201	39	27042-42421	8	27389-12031	82	277H2-62701	62
27P14-50301	39	27042-42451	8	27389-12061	82	277H2-62701	63
27P14-52001	39	27042-42451	8	27390-50321	97	277H2-62701	64
27P14-52101	39	27042-42461	8	27390-50331	97	277H2-62701	65
27P14-52201	39	27042-42461	8	27390-50341	97	277H2-62961	13
27P15-10311	41	27042-44351	15	27390-50351	97	277H2-63101	10
27P15-10321	41	27042-44361	10	27390-50361	97	277H2-63101	10
27P15-10351	40	27042-44361	18	27390-50371	97	277H2-63101	10
27P15-12501	42	27042-62001	17	27390-50381	97	277H2-63101	10
27P15-12501	43	27042-63012	13	27390-50391	97	277H2-63101	10
27P15-20401	45	27042-63101	13	27390-50401	97	277H4-12001	25
27P16-40201	54	27042-63111	13	27390-50411	97	277H6-12641	50
27P16-40211	54	27042-63281	15	27390-50421	97	277H6-12641	51
27P16-40301	52	27042-63281	15	27390-59801	97	277H6-32101	51
27P16-40351	52	27042-63291	3	27390-82011	97	277H6-52081	55
27P16-42441	52	27042-63291	3	27390-82101	97	277H8-42111	99
27P17-50251	75	27047-42241	62	27399-12051	82	277H9-12101	82
27P17-50351	75	27047-42241	63	27399-12091	82	277H9-12111	81
27P17-52101	75	27047-42241	64	274R5-12501	40	277H9-12131	82
27P17-52121	75	27047-42241	65	274R6-42451	41	277H9-12141	82
27P17-62001	76	27062-62481	15	274R6-42701	55	277N8-42001	90
27P18-30411	86	27062-62481	15	27412-62161	13	277N8-42001	91
27P18-30421	86	27092-62281	13	27412-62251	13	277R7-52061	75
27P18-30431	86	27092-62281	13	27414-30301	28	27732-42311	63
27P18-30441	86	27092-62281	16	27414-30401	28	27732-42311	64
27P18-30451	86	271A2-42211	13	27414-32021	28	27732-42311	65
27P18-30461	86	271A2-42351	8	27414-32031	28	27792-63381	52
27P18-30471	86	271A2-42351	8	27414-40321	36	278M2-42061	49
27P18-30481	86	271A2-42441	6	27414-40321	36	278M6-42651	54
27P18-30491	86	271A2-42501	13	27414-40321	37	278R0-63151	88
27P18-30501	86	271A2-42591	13	27415-52151	49	278R0-63151	89
27P18-30511	86	271A2-62561	17	27416-42761	53	278R8-43481	87
27P18-30521	86	271A4-22001	25	27419-12062	82	278R8-43481	96
27P18-30531	86	271A4-50501	39	27419-12072	82	27912-62441	49
27P18-30541	86	271A4-50701	39	27652-62211	9	27912-62513	13
27P18-30551	86	271A7-52301	75	277H0-62111	99	27919-12171	10
27P18-30561	86	271A9-12202	82	277H2-42001	4	27919-12171	10
27P18-30571	86	271A9-12251	82	277H2-42001	5	27970-82211	97
27P18-30581	86	271A9-12601	82	277H2-42011	4	27979-43101	90
27P18-30591	86	271A9-12611	82	277H2-42151	4	27979-43101	91
27P19-12001	81	271F2-62451	13	277H2-42151	5	27979-43101	99

PARTS NUMBER INDEX　部品番号索引表

部品番号 PARTS No.	図番号 FIG.NO.	部品番号 PARTS No.	図番号 FIG.NO.	部品番号 PARTS No.	図番号 FIG.NO.	部品番号 PARTS No.	図番号 FIG.NO.
280B4-40202	36	281E2-42201	9	281E5-42151	46	281E8-30361	86
280B4-40202	36	281E2-42351	13	281E5-42201	48	281E8-30371	86
280B4-40211	36	281E2-60501	16	281E5-42221	48	281E8-30381	86
280B4-40211	36	281E2-60711	18	281E6-10801	50	281E8-42002	76
280B4-42101	36	281E2-60941	10	281E6-10811	50	281E8-42002	90
280B4-42101	36	281E2-60971	10	281E6-30201	51	281E8-42002	91
280B4-42111	36	281E2-60971	10	281E6-40102	53	281E8-42002	91
280B4-42111	36	281E2-60981	10	281E6-40502	53	281E8-50201	78
280B4-42121	36	281E2-61141	10	281E6-42261	53	281E8-50211	78
280B4-42121	36	281E2-61171	10	281E6-42281	54	281E8-52001	78
280B6-52011	54	281E2-61181	10	281E6-42401	52	281E8-52011	78
280B8-42001	88	281E2-61341	10	281E6-42411	52	281E8-52201	78
280B8-42001	89	281E2-61371	10	281E6-42421	52	281E8-52201	78
280B8-42031	88	281E2-61371	10	281E6-42431	52	281E8-52201	79
280B8-42031	89	281E2-61441	10	281E6-42451	52	281E8-52201	79
280C2-42001	6	281E2-61471	10	281E6-42521	52	281E8-52211	78
280C2-42301	19	281E2-62012	12	281E6-42551	52	281E8-52211	79
280C2-42311	19	281E2-62251	17	281E6-42561	52	281E8-52221	78
280C2-42351	19	281E2-62291	17	281E6-42561	52	281E8-52221	79
280C2-62061	16	281E2-62301	16	281E6-42571	52	281E8-52801	78
280C2-62071	16	281E2-62411	16	281E6-42651	54	281E8-52801	79
280C4-12002	26	281E2-62461	16	281E6-42661	54	281E8-52901	78
281B2-60841	10	281E2-62471	17	281E6-42701	52	281E8-52901	79
281B2-60871	10	281E2-62891	12	281E6-42711	52	281E8-52911	78
281B2-60871	10	281E2-63101	10	281E6-42741	54	281E8-52911	79
281B2-60881	10	281E2-63251	13	281E6-42751	54	281E8-52931	78
281B2-60941	10	281E3-02001	21	281E6-42901	54	281E8-52931	79
281B2-60971	10	281E3-70001	22	281E6-50102	55	281E9-12151	81
281E0-40201	95	281E3-70011	22	281E6-52101	55	281H2-61001	18
281E0-40211	95	281E4-10001	23	281E6-52111	55	281H2-63101	10
281E0-40221	95	281E4-10201	25	281E7-30201	62	281H4-22001	27
281E0-40231	95	281E4-12001	25	281E7-30201	62	281H4-40101	31
281E0-40241	95	281E4-12121	23	281E7-30301	63	281H4-40101	32
281E0-40251	95	281E4-12201	25	281E7-30301	63	281H4-40131	31
281E0-40261	95	281E4-12211	25	281E7-30401	64	281H4-40131	32
281E0-40271	95	281E4-12221	25	281E7-30401	64	281H4-42001	31
281E0-40281	95	281E4-12231	25	281E7-30501	65	281H4-42001	32
281E0-40291	95	281E4-12241	25	281E7-30501	65	281H6-40101	53
281E0-40301	95	281E4-12251	25	281E7-42101	74	281H7-30201	62
281E0-40311	95	281E4-12261	25	281E7-60201	77	281H7-30201	62
281E0-40321	95	281E4-12271	25	281E7-60211	77	281H7-30301	63
281E0-40331	95	281E4-12281	25	281E7-60401	77	281H7-30301	63
281E0-40341	95	281E4-12291	25	281E7-62041	77	281H7-30401	64
281E0-40351	95	281E4-12301	25	281E7-62251	76	281H7-30401	64
281E0-40361	95	281E4-22002	27	281E8-30201	86	281H7-30511	65
281E0-40371	95	281E4-30052	28	281E8-30211	86	281H7-30511	65
281E0-40381	95	281E4-32101	28	281E8-30221	86	281H9-12101	81
281E0-42001	99	281E4-40101	31	281E8-30231	86	282M7-62201	11
281E1-02001	2	281E4-40101	33	281E8-30241	86	283A6-82501	60
281E1-02101	1	281E4-40121	31	281E8-30251	86	283A7-30501	69
281E2-42051	3	281E4-40121	32	281E8-30261	86	29560-82012	97
281E2-42051	3	281E4-40121	33	281E8-30271	86	50A71-61001	84
281E2-42061	3	281E4-40121	34	281E8-30281	86	50A71-61011	84
281E2-42061	3	281E4-40131	31	281E8-30291	86	50A72-74101	85
281E2-42071	6	281E4-40131	33	281E8-30301	86	50A72-74101	85
281E2-42071	7	281E4-42001	31	281E8-30311	86	50A72-74101	94
281E2-42081	6	281E4-42001	33	281E8-30321	86	50A72-74101	94
281E2-42081	7	281E5-40002	46	281E8-30331	86	50A72-74201	85
281E2-42091	6	281E5-42071	46	281E8-30341	86	50A72-74201	85
281E2-42091	6	281E5-42101	47	281E8-30351	86	50A72-74201	94

PARTS NUMBER INDEX　部品番号索引表

部品番号 PARTS No.	図番号 FIG.NO.	部品番号 PARTS No.	図番号 FIG.NO.	部品番号 PARTS No.	図番号 FIG.NO.	部品番号 PARTS No.	図番号 FIG.NO.
50A72-74201	94	514A5-12021	43	52N59-92221	7	57393-02041	97
50A72-74301	85	514A5-12021	44	52N59-92401	8	57393-82201	36
50A72-74301	94	516G2-74101	85	52N59-92531	7	57393-82201	36
509K2-30101	19	516G2-74101	94	52N59-92541	7	57393-82201	37
509P3-72111	7	516G2-74201	85	52N59-92551	7	57415-51201	99
510F3-04021	88	516G2-74201	94	52N59-92611	5	57415-52302	62
510F3-04021	89	516G2-74301	85	52N59-92641	5	57415-52302	63
510F3-74002	84	516G2-74301	94	52N59-92651	5	57415-52302	64
510F3-74002	93	516G3-74001	89	52197-42001	35	57415-52302	65
510F5-54021	98	516G5-13051	42	529F3-70401	70	577B9-92001	8
510F5-54041	98	516G5-13051	43	529F3-70411	71	577B9-92001	8
510F5-54051	89	516G5-13151	42	529F3-70411	71	577H1-32021	14
510F5-54051	97	516G5-13151	43	529F3-70411	72	577H5-13051	44
510F5-54061	89	516G5-51001	98	529F3-70411	72	577H6-80201	35
510F5-54061	97	516G5-51011	98	529F3-70421	73	577H6-80211	35
511F3-74021	84	516G5-51021	98	529F3-70421	73	577T5-12311	43
511F3-74021	86	516G5-51031	98	529F5-54001	99	58E08-92001	82
511F3-74021	86	516G5-51041	98	529F5-54201	99	580B6-80102	37
511F3-74021	93	516G5-51051	98	534A5-12571	44	580B6-80112	37
511F3-74021	95	516G5-51061	98	534A5-32621	57	580B6-80122	37
511F3-74021	95	516G5-51071	98	534A5-51151	91	580B6-80132	37
511F3-74031	84	516G5-51081	98	534A7-42231	38	580B6-80202	37
511F3-74031	86	516G5-51091	98	53658-43001	98	580B6-80212	37
511F3-74031	86	516G5-51101	98	53658-43011	98	580B6-80222	37
511F3-74031	93	516G5-51111	98	53658-43021	98	580B6-80232	37
511F3-74031	95	516G5-51121	98	53658-43031	98	580B6-82001	37
511F3-74031	95	516G5-51131	98	53658-43041	98	580B6-82011	37
511F5-51001	97	516G5-51141	98	53675-55051	91	580B6-82021	37
511F5-51011	97	516G5-51151	98	539A5-12011	43	580B6-82031	37
511F5-51021	97	516G5-51161	98	539A5-12041	43	580B6-82101	37
511F5-51031	97	516G5-51171	98	539A5-32301	57	580B6-82111	37
511F5-51041	97	516G5-51181	98	539A9-32001	44	580B6-82121	37
511F5-51051	97	516G5-51201	98	542F3-80101	58	580B6-82131	37
511F5-51061	97	516G5-51211	98	542F3-80101	58	581B3-80271	10
511F5-51071	97	516G5-51221	98	542F3-82011	58	581B3-80281	10
511F5-51081	97	516G5-51231	98	54235-52401	97	581B3-80371	10
511F5-51091	97	516G5-51241	98	54237-42042	21	581E1-32001	14
511F5-51101	97	516G5-51251	98	54237-42061	21	581E1-32101	9
511F5-51111	97	516G5-51261	98	54237-42072	21	581E1-32201	9
511F5-51121	97	516G5-51271	98	54238-40301	97	581E2-60202	52
511F5-51131	97	516G5-51281	98	54238-40311	97	581E2-62201	52
511F5-51141	97	516G5-51291	98	54238-40321	97	581E2-80621	62
511F5-51151	97	516G5-51301	98	54238-40331	97	581E2-80631	63
511F5-51161	97	516G5-51311	98	54238-40341	97	581E2-80641	64
511F5-51171	97	516G5-51321	98	54238-40351	97	581E2-80651	65
511F5-51181	97	516G5-51331	98	54238-42011	97	581E3-70251	57
513A5-12201	52	516G5-51341	98	543C9-92431	43	581E3-70261	57
514A2-72411	74	516G5-51351	98	543C9-92441	43	581E3-72101	56
514A2-72411	74	516G5-51361	98	55593-02371	73	581E3-72112	56
514A2-72411	74	516G5-51371	98	55593-02371	73	581E3-72251	57
514A3-72091	6	516G5-51381	98	55593-62551	99	581E3-72261	57
514A3-72091	6	516G5-54201	91	57P13-70351	75	581E3-72302	46
514A3-82611	31	516G5-54201	99	57P19-92501	43	581E3-80271	10
514A3-82611	32	516G5-59801	98	57042-72091	9	581E3-80281	10
514A3-82611	33	516G5-59801	99	57045-52151	30	581E3-80371	10
514A3-82611	34	516M5-12311	44	57045-52151	30	581E3-80401	18
514A5-12011	42	518G1-61301	93	571A6-82081	37	581E3-80471	10
514A5-12011	43	518G1-61401	93	571F5-12201	41	581E3-80481	10
514A5-12011	44	52N55-32291	52	571F6-82101	34	581E3-80501	18
514A5-12021	42	52N59-92011	8	571F6-82251	34	581E3-80571	10

PARTS NUMBER INDEX　部品番号索引表

部品番号 PARTS No.	図番号 FIG.NO.	部品番号 PARTS No.	図番号 FIG.NO.	部品番号 PARTS No.	図番号 FIG.NO.	部品番号 PARTS No.	図番号 FIG.NO.
581E3-80671	10	581H2-80641	64				
581E3-80681	10	581H2-80651	65				
581E3-80771	10	581H2-81101	10				
581E3-82301	10	581H2-81171	10				
581E3-82311	10	581H2-81181	10				
581E3-82321	10	581H2-81201	10				
581E5-51101	79	581H2-81271	10				
581E5-51111	79	581H2-81301	10				
581E5-51701	89	581H2-81371	10				
581E5-51711	89	581H2-81381	10				
581E5-51721	89	581H2-81401	10				
581E5-51731	89	581H2-81471	10				
581E5-51741	89	581H3-80271	10				
581E5-51751	89	581H3-80281	10				
581E5-51761	89	581H3-80401	18				
581E5-51771	89	581H3-80471	10				
581E5-51781	89	581H3-80481	10				
581E5-51791	89	581H3-80571	10				
581E5-51801	89	581U9-92101	13				
581E5-51811	89	583A2-72401	4				
581E5-51821	89	583A2-72401	5				
581E5-51831	89	583A2-72411	4				
581E5-51841	89	583A2-72411	5				
581E5-51851	89	583A2-72421	4				
581E5-51861	89	583A2-72421	5				
581E5-51871	89	583A2-72431	4				
581E5-51881	89	583A2-72431	5				
581E5-52001	79	583R5-52401	79				
581E5-52011	79	583R5-59851	79				
581E5-52051	30	583R5-59861	79				
581E6-A2111	90	59565-54141	97				
581E6-A2501	99	59565-54301	98				
581E6-60002	46	59595-54381	91				
581E6-80101	34	59595-54381	98				
581E6-80311	34	59595-54381	99				
581E6-80321	34	59595-54541	97				
581E6-80331	34	59595-56251	98				
581E6-82011	38	62459-23371	87				
581E6-82021	38	62459-23371	96				
581E7-42001	71	63130-12971	91				
581E7-42001	72	63130-12971	91				
581E7-42011	73	63130-12971	99				
581E7-42101	71	63130-12971	99				
581E7-42101	72	63130-12971	99				
581E7-42101	73	681E0-10051	87				
581E9-90301	5	681E0-10051	96				
581E9-90401	7	681N0-10011	87				
581E9-92101	14	681N0-10011	96				
581E9-92111	8	90789-40100	97				
581E9-92151	43						
581E9-92201	43						
581E9-92251	5						
581E9-92301	7						
581E9-92311	7						
581E9-92321	7						
581E9-92601	5						
581E9-92621	5						
581E9-92631	5						
581H2-80621	62						
581H2-80631	63						

No.PB-7P0A

2012年４月　　発行

TCM株式会社

本　社　　大阪市西区京町堀１－１５－１０

発　行　　ＴＣＭテクノ株式会社

ISSUED :APRIL, 2012

TCM CORPORATION

INTERNATIONAL MARKETING DIVISION: 1-15-10, Kyoumachi-bori,Nishi-ku,Osaka
550-0003, Japan
FAX: Japan +81-6-7669-8916

無断で転載・複製を禁ず
All rights reserved.

I-1204001(H) Printed in Japan